Lightology

lightology.com
866-954-4489
07-30-26

Project:

Company:

Location: Fixture Type:

SPEC #: **EDG50986**

Approved On: Approved By:

Stratus Indoor LED Linear Wall Grazer

By PureEdge Lighting

Description

The Stratus Linear Indoor Wall Grazer is a Non-IC rated fixture designed for use in recessed cove or surface mount applications for new residential, new commercial, and remodel. Lights textured walls up to 30 feet high. Mounts flush to ceilings or recessed within a pocket cove for the most dramatic effect. Available in 1 foot and 4 foot lengths in 3000K or 4200K color temperature. Link multiple Stratus fixtures to create long runs. Included components: Wall mounting bracket, housing, joiner bracket, reflector, LED panel, one internal 0-10V power supply, and louver. Note: End caps sold separately. Feed fixture with 120-277VAC. Dimmable with a 0-10V dimmer, sold separately. For indoor dry locations. Product is built to order.

Shown in aluminum

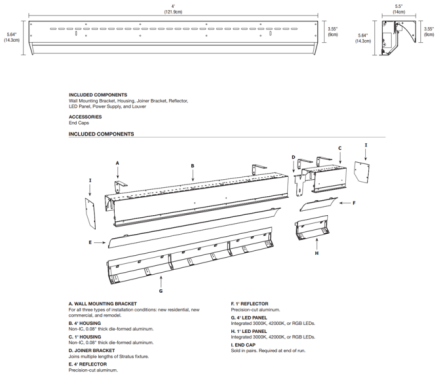

Specifications

COLOR	N/A
BODY FINISH	Aluminum
WATTAGE	15W
DIMMER	0-10V
DIMENSIONS	12"L x 5.64"H x 5.5"D
INTEGRATED LED MODULE	1 x LED/15W/120-277V LED

Technical Information

LAMP LIFE	50000 hours
COLOR RENDERING	90 CRI
LAMP COLOR	3000K
LUMENS/WATT	55.47
LUMINOUS FLUX	832 lumens

CLICK TO VIEW PRODUCT

Notes: