REV.02.11.16

Class 2

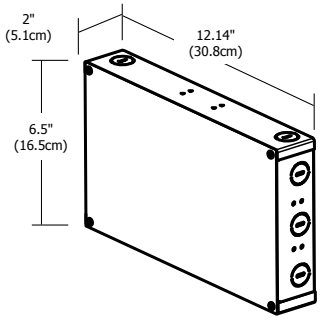

Description:
LED power supplies transform and regulate power from a line voltage power source into low voltage power for use with LED lighting. The PSB-100W-24VDC-RGB power supply accepts input voltage ranging from 120-277 volts AC and outputs 24 volt DC power up to 100 watts. The integrated RGB Driver receives signals from CDP or CTP to control RGB color mixing and light intensity.

Applications:
Indoor

Power Input:
120-277VAC, 50/60Hz

Power Output:
Class 2; 24 volts DC 2x4.16A at 100 watts maximum

Dimensions:
12.14" x 6.5" x 2"

Compatible Controllers:
Touch Screen Controller with Power Supply (CTP) or Color Dial Controller with Power Supply (CDP)

Product		Wattage		Voltage		Mode
PSB	–	**100W**	–	**24VDC**	–	**RGB**
PSB Power Supply with Enclosure Box		**100W** 100 Watt		**24VDC** 24 Volt DC		**RGB** Red, Green & Blue

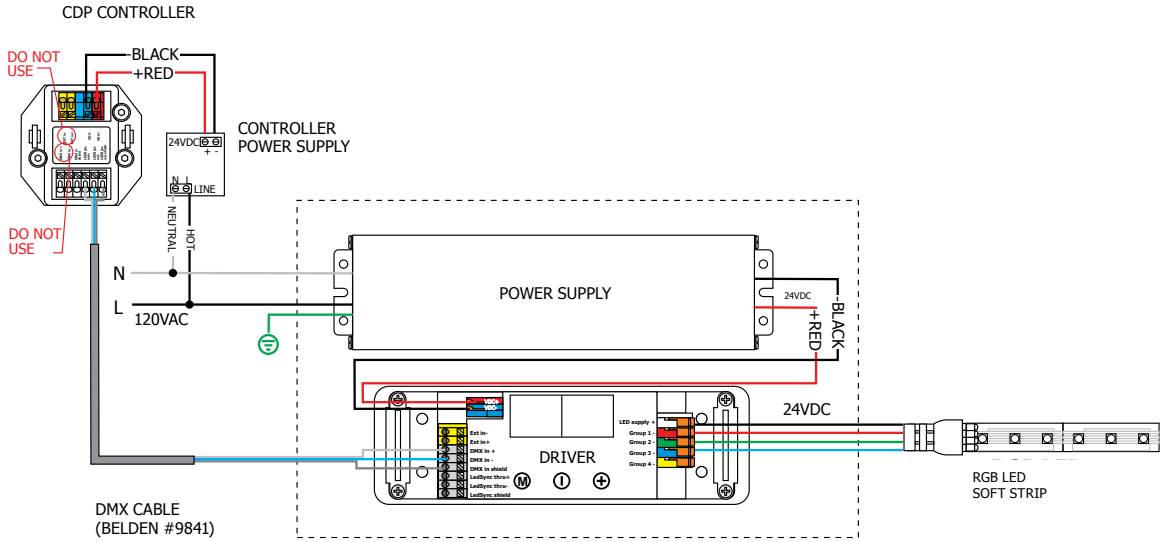

PROJECT:

FIXTURE TYPE:

DATE:

EDGE LIGHTING