ASSEMBLY INSTRUCTIONS

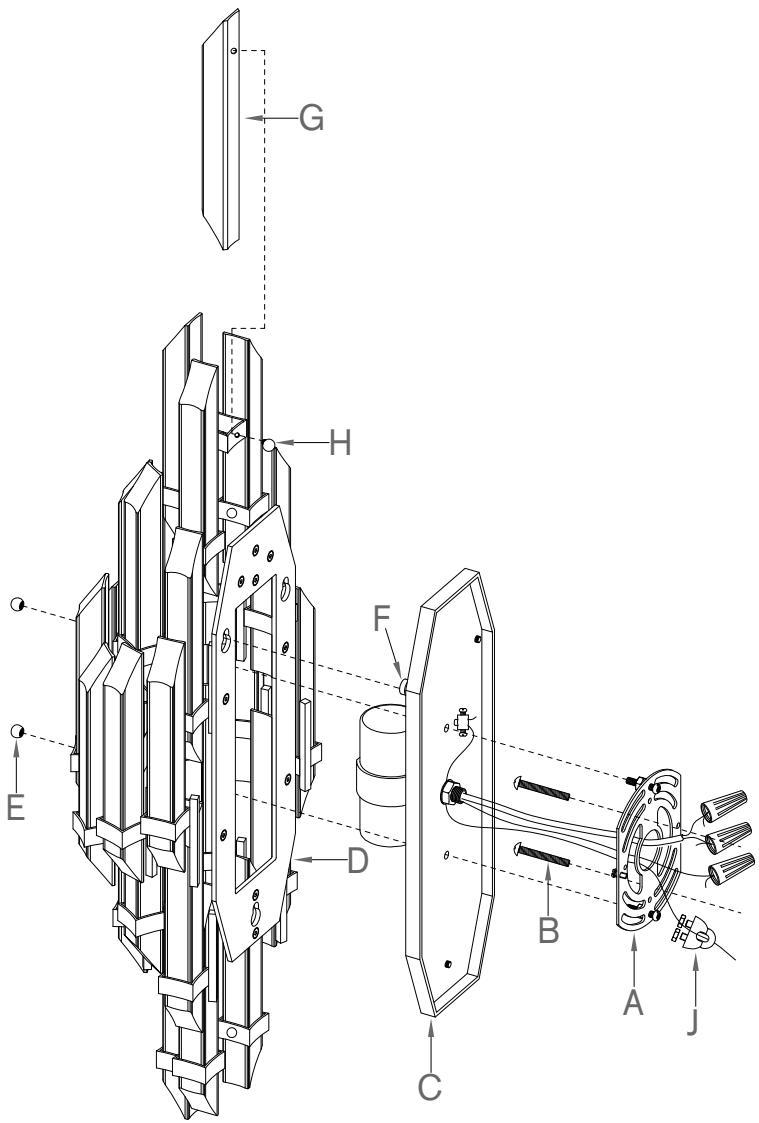

Adele Small Sconce
Item # SK 2404

WE RECOMMEND INSTALLATION OF THIS LIGHTING FIXTURE BE DONE BY A LICENSED ELECTRICIAN.

WARNING * SWITCH OFF THE MAIN ELECTRICAL SUPPLY FROM THE MAIN FUSE BOX/CIRCUIT BREAKER BEFORE INSTALLATION.**

INSPECT ITEM CAREFULLY BEFORE ATTEMPTING TO INSTALL. IF THERE IS ANY DAMAGE OR OBVIOUS DEFECT, DO NOT INSTALL.

ITEM MAY NOT BE RETURNED ONCE IT HAS BEEN INSTALLED.

1. Carefully remove all parts from the carton.
2. Remove mounting plate (A) from the assembled fixture base (C) and fixture (D) by removing cap nuts (E) in counter-clockwise direction.
3. Remove fixture (D) from fixture base (C) by lifting (D) about 1 cm then pulling out from the set knobs (F).
4. Affix mounting plate (A) to wall outlet box with mounting screws (B) provided.
5. Feed fixture safety cable from back side of (C) through one slot of (A) and wrap the end to cable lock nut (J), and secure by tighten the hex nuts.
6. Attach ground (green or green/yellow) wire to ground wire from wall outlet box (usually green or copper in color), fasten together with a plastic wire connector. Tighten wrap the wire connector with electrical tape. so the end of the connector is sealed. IT IS IMPERATIVE THAT THE OUTLET BOX IN YOUR HOME BE PROPERLY GROUNDED.
7. Connect neutral (white) fixture wire coming from fixture base to neutral (usually white) outlet wire. Fasten both wires together with a plastic wire connector and tightly wrap the wire conncetor with electrical tape.
8. Repeat the procedure with the hot (black) wires. Always make sure that no wire strands are left outside the connectors. DO NOT REVERSE THE HOT AND NEUTRAL CONNECTIONS OTHERWISE SAFETY WILL BE COMPROMISED.
9. Insert light bulbs (not included) Type C, maximum 40 watt into sockets.
10. Carefully hook the fixture (D) to the set knobs (F) on fixture base (C) through the key holes at back side of (D).
11. Replace the assembled fixture (D) and fixture base (C) to the affixed mounting plate (A) and tighten with cap nuts (E).
12. Loosen set screws (H), insert acrylic rods (G) into the light fixture by aligning the hole and secure by tightening set screws (E), make sure the location hole on side of crystal rods is on the upper side. Tighten by hand. DO NOT OVERTIGHTEN.

*** Clean with a dry, soft cloth only. Use no harsh abrasives or chemical agents.

VISUAL COMFORT & CO. Est. 1987