INSTALLATION INSTRUCTIONS

For item#2116-726 (New. 2022/12/30)

READ AND SAVE THESE INSTRUCTIONS

WARNING! SHUT POWER OFF AT FUSE OR CIRCUIT BREAKER.

AVERTISSEMENT! COUPER LE COURANT AU NIVEAU DES FUSIBLES OU DU DISJONCTEUR.

MOUNTING THE FIXTURE (Fig.1)

1. Shut off power at the fuse box or circuit breaker box and remove the old fixture including the mounting hardware.
2. Carefully unpack your new fixture and lay out all the parts in a clean area. Take care not to misplace any small parts necessary for installation.
3. Determine the desired hanging height and thread rods (F1, F2 and F3) to all thread (G) on top of fixture body. Attach canopy (D) by threading onto rod (F1). Carefully pass wires through each rod as you assemble.
4. Attach mounting plate (A) to junction box (Not included) with mounting screws (B) (Size: #8-32N*L0.5”). The side of the mounting plate (A) marked “GND” and two convex points must face out.
5. The support cable is provided to support weight of fixture while wiring. Align the fixture to mounting plate (A) and attach hook (K) on the end of support cable (E) into a slot located on mounting plate (A). Carefully allow the support cable (E) to support weight of the fixture while wiring.

CONNECTING THE WIRES (Fig. 2)

6. Connect the electrical wires as shown in Fig.2, making sure that all wire connectors are secured. If your junction box has a ground wire (green or bare copper), connect the fixture’s ground wire to it. Otherwise, connect the fixture’s ground wire directly to the mounting plate (A) using green screw provided.
7. Tuck wire connectors neatly into the junction box.

FINISHING THE INSTALLATION (Fig.1)

8. Place canopy (D) over mounting plate (A) and secure with screws (C).
9. Place candle covers (I) over sockets (J).
10. Install (6) six candelabra base bulbs (H) up to 60 watts each or CFL or LED equivalent (not included) in accordance with the fixture specification. — **DO NOT EXCEED THE MAXIMUM WATTAGE RATING! (NE PAS DEPASSER LA PUISSANCE NOMINALE MAXIMALE!)**

Your installation is now complete. Return power to the junction box and test the fixture.

Note: Illustration (Fig.1) on this manual is for installation purposes only. It may or may not be identical to the fixture purchased.

Fig. 1

Set# A-021-118SQ
-Mounting plate
-Ground screw
-Mounting screws *2

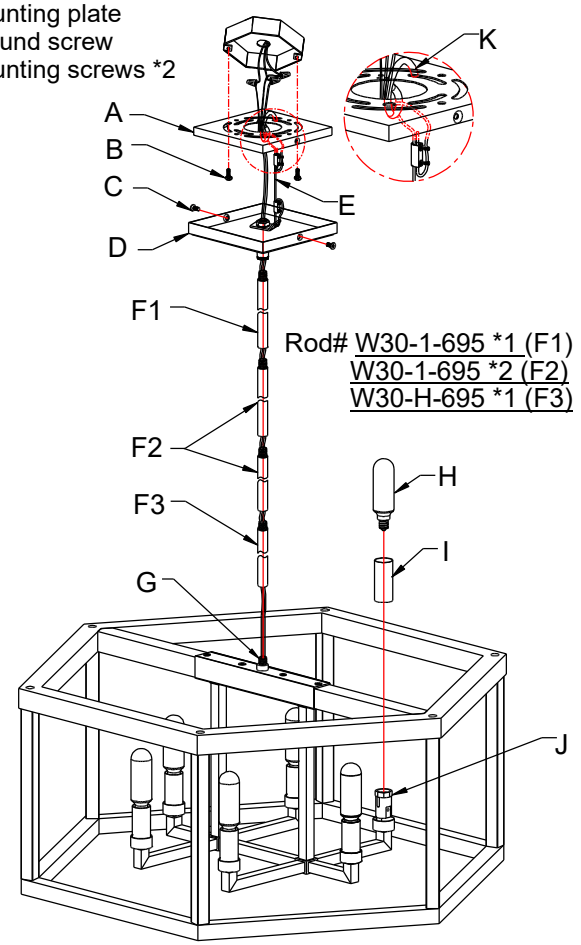

Candle cover# CCV21055P-695

Fig. 2

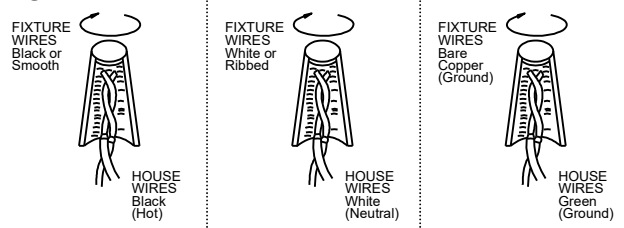

LA-3625E

Intertek

american lighting association