INSTALLATION INSTRUCTIONS

Item#2692-115 (New. 02/25/2022)

READ AND SAVE THESE INSTRUCTIONS

WARNING! SHUT POWER OFF AT FUSE OR CIRCUIT BREAKER.

AVERTISSEMENT! COUPER LE COURANT AU NIVEAU DES FUSIBLES OU DU DISJONCTEUR.

MOUNTING THE FIXTURE (Fig.1)

1. Shut off power at the fuse box or circuit breaker box and remove the old fixture including the mounting hardware.
2. Carefully unpack your new fixture and lay out all the parts in a clear area. Take care not to misplace any small parts necessary for installation.
3. Loosen screws (E) to remove mounting plate (A) from fixture body (F).
4. Loosen screws (G) to remove decorative part (L) from fixture body (F).
5. Place glass shade (K) into decorative part (L). Then secure with screws (G) and bushing (J) (Do not over tighten).

FINISHING THE INSTALLATION (Fig.1)

6. Install (2) two candelabra base bulbs (H) up to 60 watts each or CFL or LED equivalent (not included) in accordance with the fixture specification. **—DO NOT EXCEED THE MAXIMUM WATTAGE RATING! (NE PAS DEPASSER LA PUISSANCE NOMINALE MAXIMALE!)**
7. Place glass assembly over fixture body (F) and fasten with screws (G).
8. Position mounting plate (A) on the wall and mark the location of two drywall anchors (B). Pre-drill the holes for the drywall anchors (B). Insert the drywall anchors (B) into the wall.
9. Attach mounting plate (A) to the junction box (not included) using mounting screws (D). The side of the mounting plate (A) marked “GND” must face out.
10. Place woodscrews (C) through holes into the drywall anchor (B) to secure mounting plate (A) as shown in Fig.1.

CONNECTING THE WIRES (Fig. 2)

11. Connect the electrical wires as shown in Fig. 2, making sure that all wire connectors are secured. If your outlet box has a ground wire (green or bare copper), connect the fixture’s ground wire to it. Otherwise, connect the fixture’s ground wire directly to the mounting plate (A) using the green screw provided. After the wires are connected, tuck them carefully inside the junction box.
12. Place fixture body (F) over mounting plate (A) and secure with screws (E).

Your installation is now complete. Return power and test the fixture.

Note: Illustration (Fig.1) on this manual is for installation purposes only. It may or may not be identical to the fixture purchased.

Fig. 1

Set#A-021-175350
-Mounting plate
-Ground screw
- Mounting screw*2

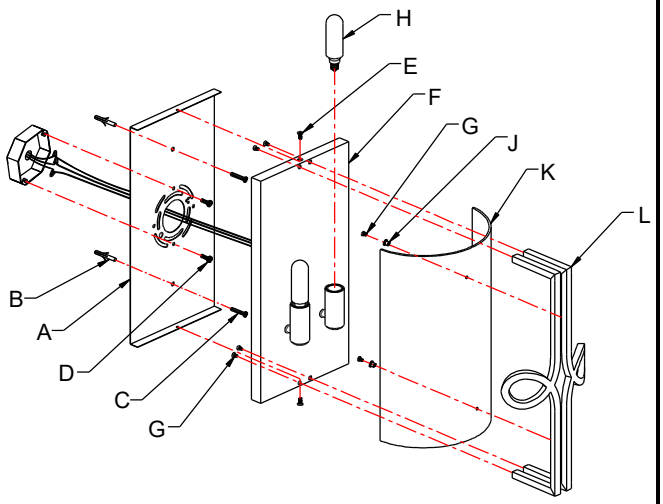

Fig. 2

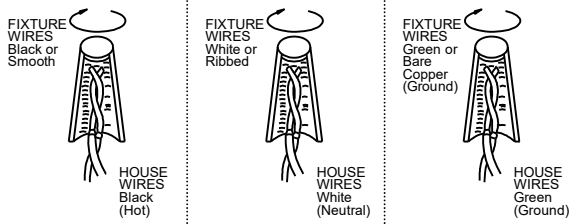

MIN 75℃ SUPPLY CONDUCTORS

LA-3518E