INSTALLATION INSTRUCTIONS

Item#4108-66/84/172 (New. 2022/12/30)

READ AND SAVE THESE INSTRUCTIONS

WARNING! SHUT POWER OFF AT FUSE OR CIRCUIT BREAKER.

AVERTISSEMENT! COUPER LE COURANT AU NIVEAU DES FUSIBLES OU DU DISJONCTEUR.

PREPARATION (Fig. 1)

1. Shut off power at the fuse box or circuit breaker box and remove the old fixture including the mounting hardware.
2. Carefully unpack your new fixture and lay out all the parts in a clean area. Take care not to misplace any small parts necessary for installation.

ASSEMBLING THE FIXTURE (Fig. 1)

3. Loosen hex nuts (D) by using wrench (J) (not included), then remove metal washers (E), lock washers (L), metal support plate (I), canopy (H) and swivels (G).
4. Secure metal tube (M) onto all thread (U) on the fixture body.
5. Determine the desired hanging height and thread rods (F1, F2 and F3) onto all thread on metal tube (M). Carefully pass wires through each rod during assembly. Secure swivels (G) onto rods (F1).
6. Align canopy (H) and metal support plate (I) followed by lock washer (L) and metal washer (E) onto swivels (G) and secure with hex nuts (D) via Wrench (J) (not included).
7. Position mounting plate (A) on ceiling and mark location of the two drywall anchors (K). Pre-drill holes for drywall anchors (K). Then insert drywall anchors (K) into ceiling.
8. Attach mounting plate (A) to junction box (Not included) with mounting screws (B) (Size: #8-32N*L0.5") and wood screws (O) into drywall anchors (K). The side of the mounting plate marked "GND" must face out.

CONNECTING THE WIRES (Fig. 2)

9. Connect the electrical wires as shown in Fig. 2, making sure that all wire connectors are secured. If your junction box has a ground wire (green or bare copper), connect fixture's ground wire to it. Otherwise, connect fixture's ground wire directly to the mounting plate (A) using green screw provided.
10. Tuck wire connectors neatly inside the junction box.

COMPLETING THE INSTALLATION (Fig. 1)

11. Align canopy (H) onto mounting plate (A) and secure with screws (C).
12. Place large glass shade (T), metal cover (S), small glass shade (R), metal ring (Q) over the socket (V) in that order. Then secure with screw shell (P).
13. Install (3) three medium base bulbs (N) up to 100 watts each or CFL or LED equivalent (not included) in accordance with the fixture specification. — **DO NOT EXCEED THE MAXIMUM WATTAGE RATING! (NE PAS DEPASSER LA PUISSANCE NOMINALE MAXIMALE!).**

Your installation is now complete. Return power to the junction box and test the fixture.

Note: Illustration (Fig. 1) on this manual is for installation purposes only. It may or may not be identical to the fixture purchased.

Fig. 1

Set# A-021-375118
-Mounting plate
-Ground screw
-Mounting screw *2

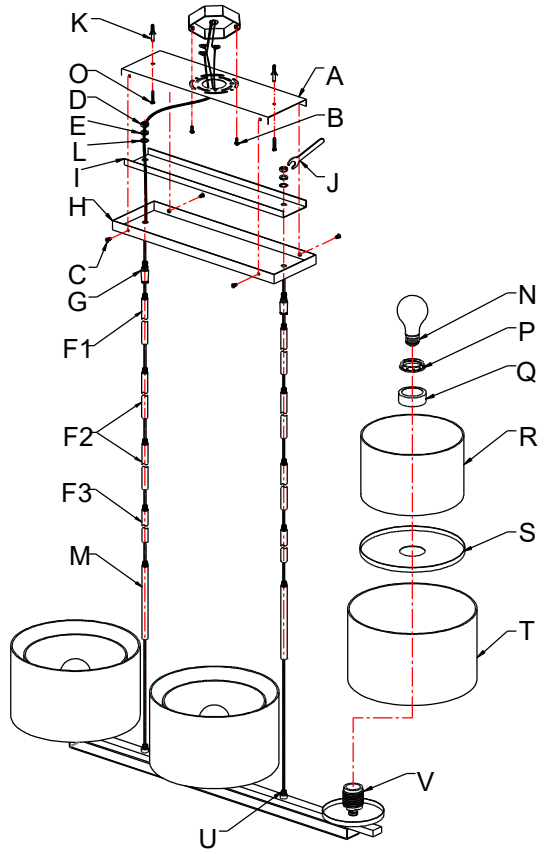

Rod# W30-1-66/84/172 *2 (F1)
W30-1-66/84/172 *4 (F2)
W30-H-66/84/172 *2 (F3)

Fig. 2

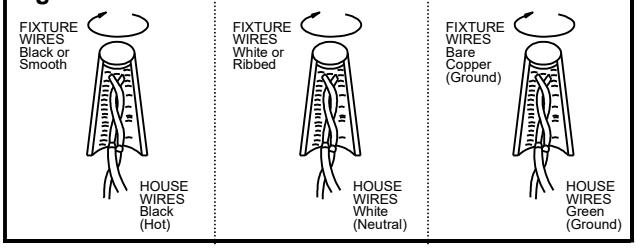

LA-3620E