INSTALLATION INSTRUCTIONS

Item#72020-A179 (New. 05/08/2019)

READ AND SAVE THESE INSTRUCTIONS

WARNING! SHUT POWER OFF AT FUSE OR CIRCUIT BREAKER.

AVERTISSEMENT! COUPER LE COURANT AU NIVEAU DES FUSIBLES OU DU DISJONCTEUR.

MOUNTING THE BACKPLATE (Fig.1)

1. Shut off power at the fuse box or circuit breaker box and remove the old fixture including the mounting hardware.
2. Carefully unpack your new fixture and lay out all the parts in a clear area. Take care not to misplace any small parts necessary for installation.
3. Attach the mounting plate (A) to the junction box with screws (B) (Size: #8-32N*L0.5”). The side of the mounting plate marked “GND” must face out.

CONNECTING THE WIRES (Fig. 2)

4. Connect the electrical wires as shown in Fig. 2, making sure that all wire connectors are secured. If your outlet box has a ground wire (green or bare copper), connect the fixture’s ground wire to it. Otherwise, connect the fixture’s ground wire directly to the mounting plate (A) using the green screw provided. After the wires are connected, carefully tuck them inside the junction box.

COMPLETING THE INSTALLATION

5. Install the glass panel (G) into fixture body (D) and secure with the cap nut and clips provided.
6. Place the fixture body (D) over the mounting plate (A) and secure with screws (C).
7. To prevent moisture from entering the outlet box and causing a short, use clear caulking (i.e. Indoor/Outdoor Silicone Sealant) to outline the outside of fixture back plate where it meets the wall leaving a space at bottom to allow moisture a means to escape (Fig.3).
8. Install (1) one medium base bulb up to 100 watts (F) or CFL or LED equivalent (not included) in accordance with the fixture specification. **(DO NOT EXCEED THE SPECIFIED WATTAGE!) (NE PAS DEPASSER LA PUISSANCE NOMINALE MAXIMALE!).**

Your installation is now complete. Return power and test the fixture.

Note: Illustration (Fig. 1) on this manual is for installation purposes only. It may or may not be identical to the fixture purchased.

Fig. 1

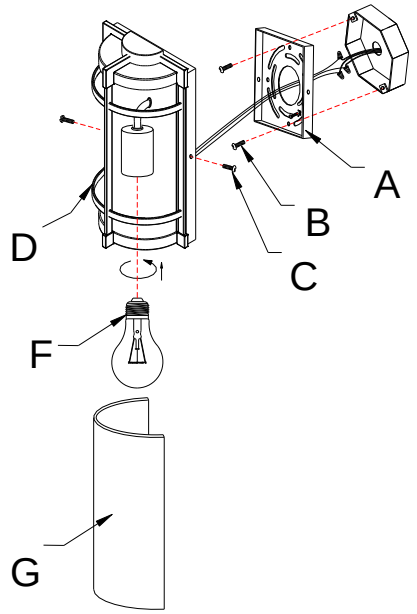

Fig. 2

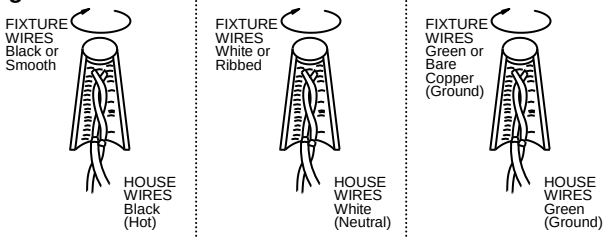

Fig. 3

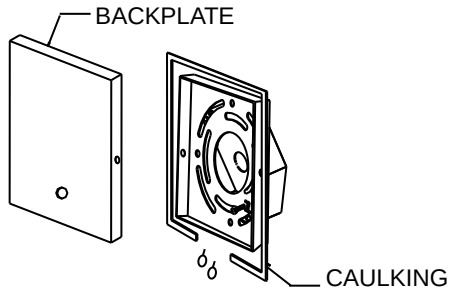

LA-3105E