EUROfase

Bloomfield, Chandelier, 22-Light, 47", Matte Gold, Gold Aluminum

Item No.
37096-014

JOB NAME: **DATE:** **TYPE:**

COMMENTS:

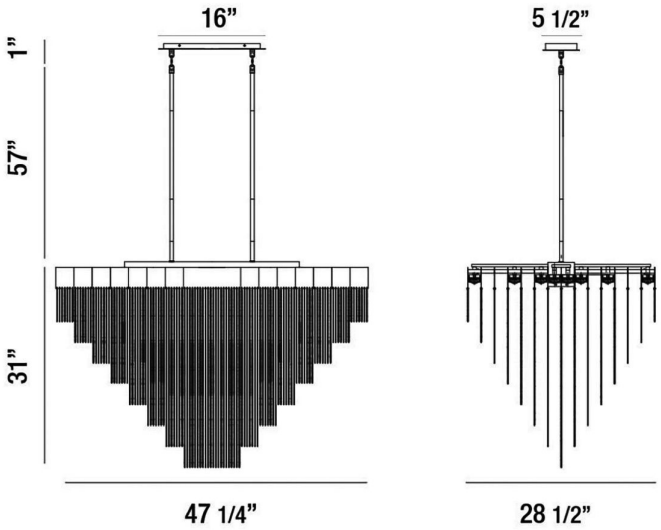

LIGHT INFORMATION

Light Type	Integrated LED
Bulb Socket	N/A
Bulb Shape	N/A
Bulb Included	Yes
CRI	90
Delivered Lumens	2600
Colour Temperature (Kelvin)	3000K
Average Hours LED (L70)	20000
Number of Lights	22
Light Direction	Down
Dimming Method	Triac/Elv
Output Voltage	120
Current Type	AC

LIGHT INFORMATION (CONT’D.)

Light Wattage	4.5
Total Wattage	99

DIMENSIONS & WEIGHT

Product Width (In)	28.5
Product Height (In)	31
Product Ext (In)	
Product Diameter (In)	
Product Weight (Lbs)	50.69
Product Length (In)	47.25

INSTALLATION

Mounting Type	J-Box
Mounting Location Rating	Dry

PRODUCT FINISH

Finish: Matte Gold

SHADE FINISH

Shade Finish: Gold

PRODUCT FEATURES

Feature 1:

Feature 2:

Feature 3:

CERTIFICATIONS & COMPLIANCE

COPYRIGHT © EUROFASE LTD.

Bloomfield, Chandelier, 28-Light, 73", Matte Black, Black Aluminum

Item No.
37097-023

JOB NAME: **DATE:** **TYPE:**

COMMENTS:

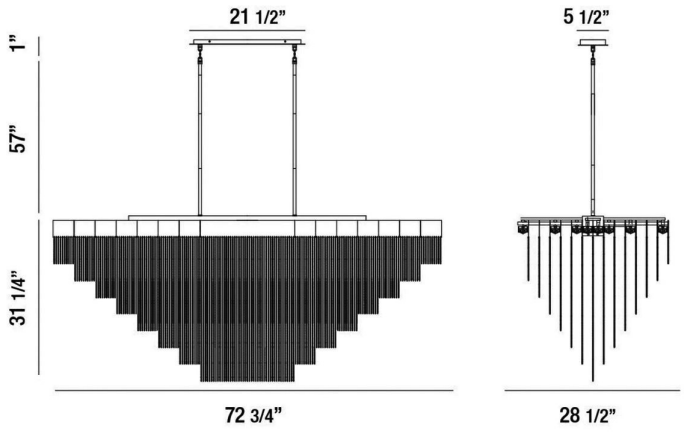

LIGHT INFORMATION

Light Type	Integrated LED
Bulb Socket	N/A
Bulb Shape	N/A
Bulb Included	Yes
CRI	90
Delivered Lumens	3300
Colour Temperature (Kelvin)	3000K
Average Hours LED (L70)	20000
Number of Lights	28
Light Direction	Down
Dimming Method	Triac/Elv
Output Voltage	120
Current Type	AC

LIGHT INFORMATION (CONT'D.)

Light Wattage	4.5
Total Wattage	126

DIMENSIONS & WEIGHT

Product Width (In)	28.5
Product Height (In)	31.25
Product Ext (In)	
Product Diameter (In)	
Product Weight (Lbs)	74.96
Product Length (In)	72.75

INSTALLATION

Mounting Type	J-Box
Mounting Location Rating	Dry

PRODUCT FINISH

Finish: Matte Black

SHADE FINISH

Shade Finish: Black

PRODUCT FEATURES

Feature 1:

Feature 2:

Feature 3:

CERTIFICATIONS & COMPLIANCE

COPYRIGHT © EUROFASE LTD.