HINKLEY

3 SPEED FAN & LIGHT REMOTE CONTROL

INSTALLATION INSTRUCTIONS

Model: 980014

READ AND SAVE THESE INSTRUCTIONS

INSTALLING THE WALL CONTROL

REMEMBER to turn off the power before you begin.
NOTE - Secures to any surface or application: flat wall, single gang box, multi gang box.

Option 1. Flat Surface Installation

1. Select a desired location. Use the wall plate to mark the location of the mounting holes. Plastic wall anchors or mounting screws are needed for this application. (Fig. 1)
2. Seat the cradle B into the wall plate. Secure the wall plate to the wall using the provided hardware.
3. Snap the face plate cover onto the wall bracket.
4. Remote transmitter will be held in place with built in magnets.

Option 2. For single gang box

1. Remove the existing wall plate and the old switch from the wall outlet box.
2. Seat the cradle A into the wall plate. (Fig. 2)
3. Connect the black lead wires from the switch in the cradle A to the black wires in the switch box. Hot input wire to one of the cradle A switch leads. Power lead to the fan is connected to the remaining switch lead.
4. Connect the wall plate / cradle A assembly to the wall outlet box using the supplied hardware.
5. Snap the face plate cover onto the wall bracket.
6. Remote transmitter will be held in place with built in magnets.

Option 3. Multi Gang Wall Switch Box Installation

1. Remove the existing wall plate and old switch from the wall outlet box. (Fig. 3)
2. Connect the black lead wires from the switch in the cradle A to the black wires in the switch box. Hot input wire to one of the cradle switch leads. Power lead to the fan is connected to the remaining switch lead. (Fig. 4)
3. Attach the cradle A to the wall switch box using the supplied hardware.
4. Attach the multi-gang faceplate to the switch set in the wall outlet box. Cradle A of Hinkley switch will fit in any standard decora face plate.
5. Remote transmitter will be held in place with built in magnets.

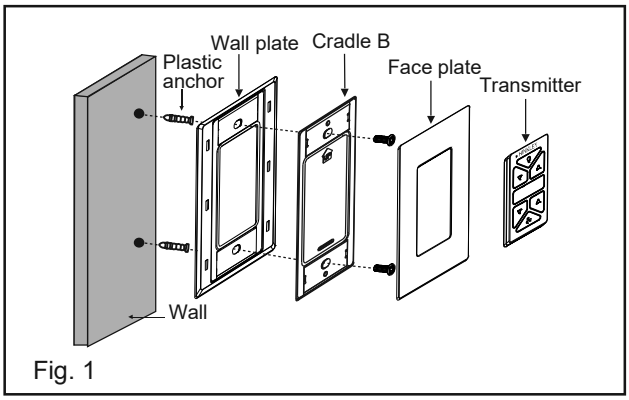

Fig. 1

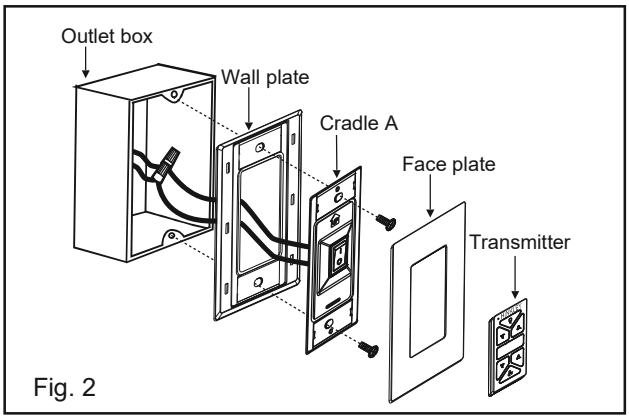

Fig. 2

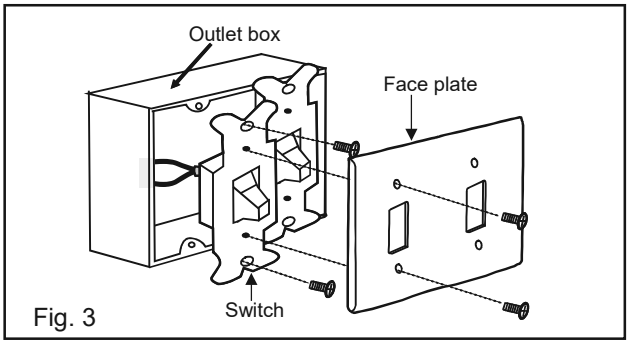

Fig. 3

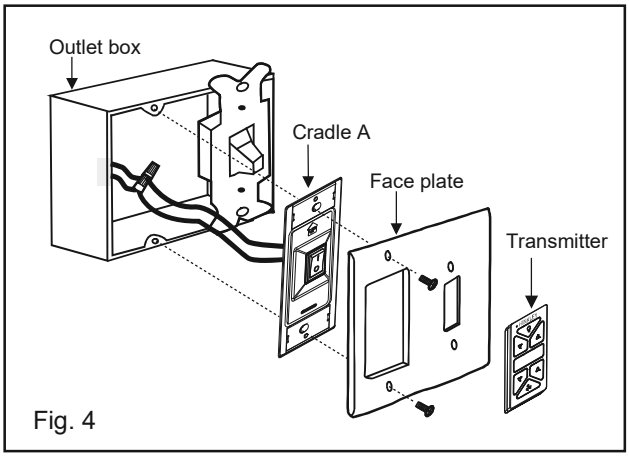

Fig. 4

OPERATION

Your DC brushless motor is equipped with an automatically learned type remote control. There is no frequency switches on the receiver or transmitter. The fan can start to use once the pairing process is done.

Remove the panel from the transmitter and then install one 2032 battery (included). You need to use a coin to open or close the battery cover. To prevent damage to transmitter, remove the battery if not use for long periods of time (Fig. 5)

WARNING: Chemical Burn Hazard. Keep batteries away from children.

This product contains a lithium button/coin cell battery. If a new or used lithium button/coin cell battery is swallowed or enters the body, it can cause severe internal burns and can lead to death in as little as 2 hours. Always completely secure the battery compartment. If the battery compartment does not close securely, stop using the product, remove the batteries, and keep it away from children. IF you think batteries might have been swallowed or placed inside any part of the body, seek immediate medical attention.

The batteries shall be disposed of properly, including keeping them away from children; Even used cells may cause injury.

1. button:
   Press this button and release instantly to turn on or off the light.

2. △ ▽ button:
   Press and hold to dim or brighten lights to the desired level and release.

3. △ ▽ button:
   Press button for turn on and setting 1-3 fan speed.

4. button:
   Press this button to turn the fan off.

5. Signal light (Fig. 6)

Pairing Process

With the fan's power off, restore power to the fan. Press and hold " " button for about 5 seconds and release. If optional light kit is installed, the light kit will flash three times and the motor spin up for 10 seconds on low speed. The fan has completed the pairing process with the wall control and is ready for use.

NOTE: A single fan can be controlled with as many as 3 wall controls in one room. Every control will need to repeat the pairing process based on instructions above and all controls must be within 30 feet of the fan.

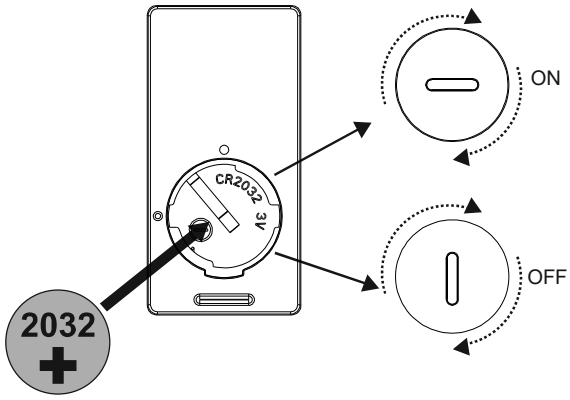

Fig. 5

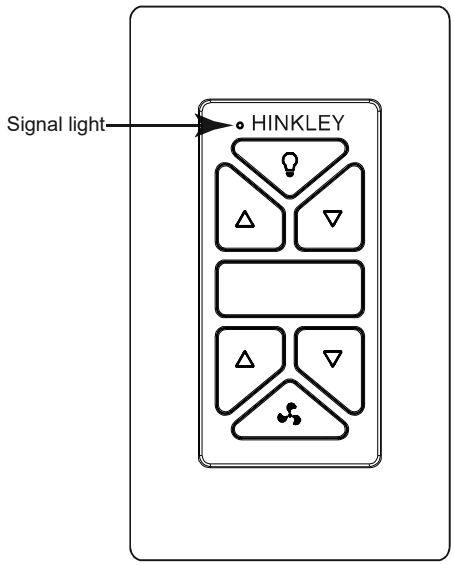

Fig. 6