FLEX NEON LRF7 0.7" FLAT LENS INDOOR/OUTDOOR

24VDC, 2W | 5W | 7W BENDS LEFT/RIGHT STATIC WHITE, WARM DIM & TUNABLE WHITE

ASSEMBLED IN AMERICA

REV 01.27.25

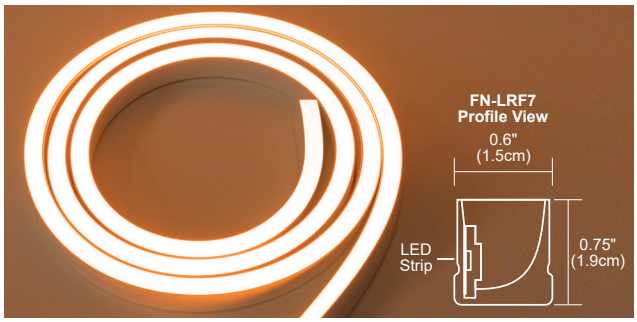

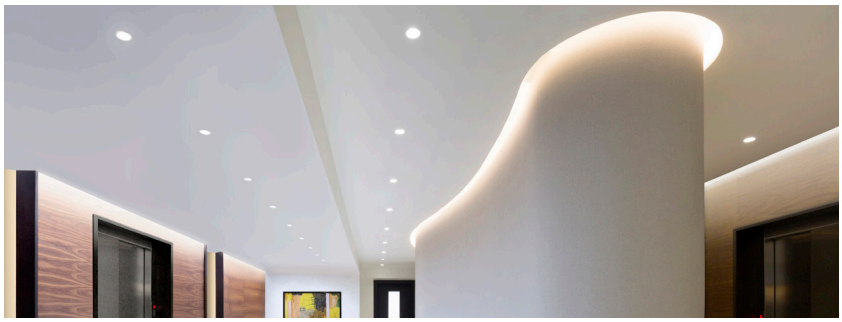

DESCRIPTION

LRF7 Flexible Neon Bends Left to Right with a 0.7" wide Flat lens, producing superior color quality and performance while creating uniform illumination without visible dots. Flex Neon LRF7 can be surface mounted or flush mounted. Choose from multiple static white color temperatures including two Warm Dim options of 2400K (**24D**) or 2700K (**27D**) and Tunable White (**2K6K**). Tunable White technology grants independent control for adjusting LED color temperature and brightness. Use with two dimmers or, our proprietary Tunable White Controller (**CDMX-1**) for fast and accurate adjustment with three pre-set scenes (Ordered separately). The (**W**) is an IP67 rated wet location fixture featuring watertight barrel connections. The (**S**) Seamless (for continuous, seamless runs), is rated for Indoor Damp Locations ONLY using Class 2 bare wire connectors. Fixture includes a 5-year pro-rated warranty. Patent pending. For custom designs and quotes, send drawings to design@PureEdgeLighting.com.

For quick & easy reference, plus the most up-to-date pricing, use our Flex Neon LRF7 Configurator

SPECIFICATIONS

DIMENSIONS	Height: 0.75" Width 0.6" (TOP) 0.7" (BOTTOM)
INPUT	24VDC with 5" leads
POWER SUPPLIES	Remote 24VDC power supply required
POWER CONSUMPTION	2, 5, and 7 watts per foot
INCREMENTS	2.4" or 3"
MAX LENGTH	2W - 40', 5W- 20', 7W- 12'
BENDING	4" Minimum Radius
MATERIAL	UV Resistant PVC
OPERATING TEMPERATURE	-4° F (-20° C) to 122° F (+50° C)
AVERAGE LED LIFE	50,000 hrs
WARRANTY	5 Year pro-rated
COMPLIANCE	Class 2 Wiring Indoor Applications, Outdoor Wet Location with Water Tight Barrel Connectors IP67 Rated, ETL listed

LUMEN PERFORMANCE AT 3000K 7W PER FOOT

LUMEN OUTPUT	384 lm/ft	EFFICIENCY	53 lm/watt
CRI	94	R9	76
BEAM ANGLE	120°	BEAM TOLERANCE	+/- 30CCT

W

Wet Location Outdoor

S

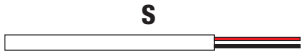

Seamless Bare Wire Indoor suitable for Indoor Damp Location

REMOTE POWER SUPPLIES*, DIMMERS & CONTROLS (SOLD SEPARATELY)

24VDC, Class 2 wiring

OUTDOOR/WET LOCATION

- Home Integration Solutions

Static White

- Pure Smart™ WiZ Pro Power Supplies & Controls
- UNI Driver: Universal Dimming **(TRIAC, ELV, 0-10V)**

Warm Dim

- UNI Driver: Universal Dimming **(TRIAC, ELV, 0-10V)**
- **Make It Smart:** Pure Smart™ Wi-Fi Dimmer

Tunable White

- Pure Smart™ WiZ Pro Power Supplies & Controls
- 0-10V: Requires two dimmers, one for intensity and one for color temperature
- DMX Dynamic Color Changing: Must be used with PureEdge Controllers

INDOOR

- Home Integration Solutions

Static White

- Pure Smart™ WiZ Pro Power Supplies & Controls
- UNI Driver: Universal Dimming **(TRIAC, ELV, 0-10V)**

Warm Dim

- UNI Driver: Universal Dimming **(TRIAC, ELV, 0-10V)**
- **Make It Smart:** Pure Smart™ Wi-Fi Dimmer

Tunable White

- Pure Smart™ WiZ Pro Power Supplies & Controls
- 0-10V: Requires two dimmers, one for intensity and one for color temperature
- DMX Dynamic Color Changing: Must be used with PureEdge Controllers

*In-Wall Mounting and drop ceiling Kits available for select power supplies

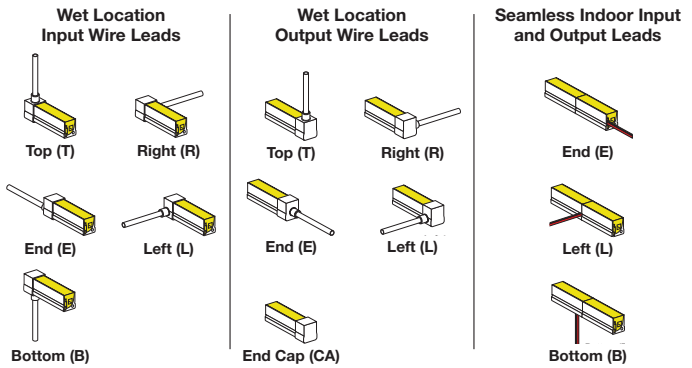

System		Viewing Angle Model Shape		Wattage		Length in Inches		Color Temperature		5 Inch Input Wire Feed		5 Inch Output Wire		Environment
FN	–	**LRF7**	–	**2W**	–	**120**	–	**27K**	–	**E**		**L**		**W**

FN Flex Neon 24V

LRF7 Left or Right side bend, Flat top view 0.7" x 0.75"

2W 2.5 watts per foot
5W 5 watts per foot
7W 7.5 watts per foot

6-480 (40ft max)
6-240 (20ft max)
6-144 (12ft max)

†Static & Tunable White: 2.4" Increments
Warm Dim: 3" increments

22K 2200K Amber White
24K 2400K Very Warm White
24D* 2400K Warm Dim, Dims to 1800K
27K 2700K Incandescent White
27D* 2700K Warm Dim, Dims to 2000K
30K 3000K Warm White
35K 3500K Neutral White
2K6K Tunable White 2000K-6500K
27K6 Tunable White 2700K-6500K

*5 Watt Only

T Top Power Input Wire
E* End Power Input Wire
L* Left Power Input Wire
R Right Power Input Wire
B* Bottom Power Input Wire

T Top Wire Lead Out
E* End Wire Lead Out
L* Left Wire Lead Out
R Right Wire Lead Out
B* Bottom Wire Lead Out
CA** Cap at end, no feed through

S Seamless Indoor/ Damp location bare wire leads Bottom and Left Feed Only
W Outdoor wet location Barrel Connector cable leads

*Seamless indoor: E, L, B Only
**No output feed wire for Indoor Seamless

PROJECT		FIXTURE TYPE		DATE	

FLEX NEON LRF7 0.7" FLAT LENS INDOOR/OUTDOOR

24VDC, 2W | 5W | 7W BENDS LEFT/RIGHT STATIC WHITE, WARM DIM & TUNABLE WHITE

REV 01.27.25

NOMINAL DELIVERED LUMENS

	LRF7																
WATTS PER FOOT	2W (2.5 watts)					5W (5 watts)							7W (7.5 watts)				
COLOR TEMPERATURE	22K	24K	27K	30K	35K	22K	24K	24D*	27K	27D*	30K	35K	22K	24K	27K	30K	35K
LUMENS PER FOOT (lm/ft)	128	128	129	135	154	236	236	239	273	249	284	285	365	365	369	384	441
LUMENS PER WATT (lm/w)	51	51	52	54	62	54	54	54	57	57	59	65	50	50	51	53	60
CRI	92+	92+	92+	92+	92+	92+	92+	92+	94+	92+	94+	92+	92+	92+	92+	92+	92+

*Warm Dim: 4.8 Watts

	2K6K*																										
WATTS PER FOOT	2W									4.6W									7.5W								
COLOR TEMPERATURE	20K	22K	24K	27K	30K	35K	40K	57K	65K	20K	22K	24K	27K	30K	35K	40K	57K	65K	20K	22K	24K	27K	30K	35K	40K	57K	65K
LUMENS PER FOOT (lm/ft)	68	69	70	71	72	74	81	87	93	166	172	179	186	193	206	221	223	225	230	241	252	263	274	295	311	314	317
LUMENS PER WATT (lm/w)	37	35	35	36	36	37	90	44	52	36	36	37	39	40	43	46	46	49	36	34	35	37	38	41	43	44	50
CRI	91+	91+	91+	94+	93+	92+	92+	91+	91+	91+	91+	91+	94+	93+	92+	92+	91+	91+	91+	91+	91+	94+	93+	92+	92+	91+	91+

*Tunable White has a variance in color temperature due to the curvature of the material.

	27K6																				
WATTS PER FOOT	2W							4.6W							7.5W						
COLOR TEMPERATURE	27K	30K	35K	40K	45K	57K	65K	27K	30K	35K	40K	45K	57K	65K	27K	30K	35K	40K	45K	57K	65K
LUMENS PER FOOT (lm/ft)	74	88	90	93	101	109	104	185	189	196	203	201	199	199	250	255	265	274	271	269	268
LUMENS PER WATT (lm/w)	37	35	36	37	41	44	52	46	41	43	44	44	43	50	39	35	37	38	38	37	42
CRI	94+	93+	92+	92+	92+	92+	91+	94+	93+	92+	92+	92+	92+	91+	94+	93+	92+	92+	92+	92+	91+

*Tunable White has a variance in color temperature due to the curvature of the material.

DRAWINGS & DIMENSIONS Dimensions for the Flex Neon LRF7

Seamless (S) Connection
Indoor / Damp Rated with No End Cap

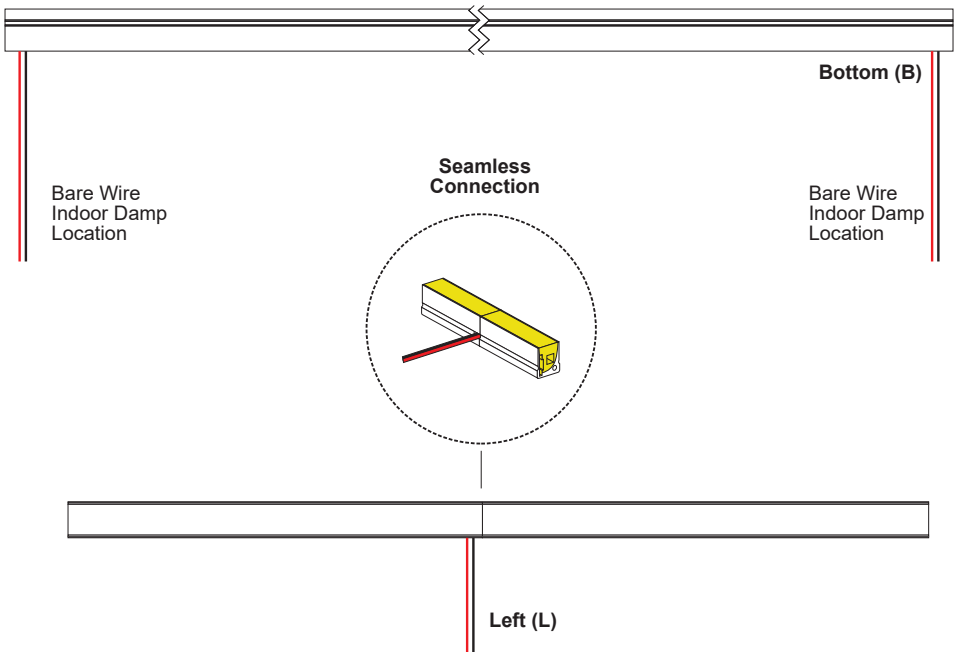

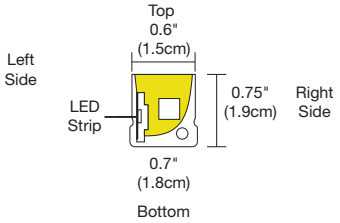

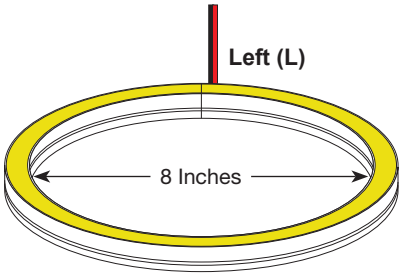

Seamless Circle

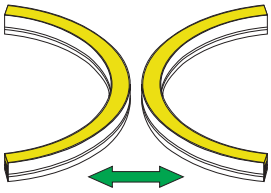

Bends Right to Left or Left to Right

Wet (W)
Outdoor Location with End Cap

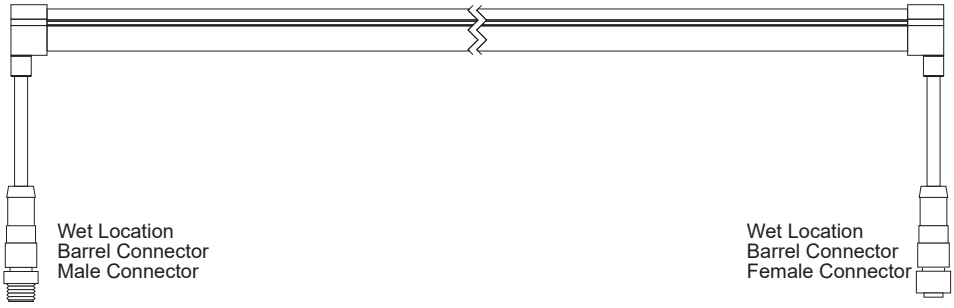

PROJECT		FIXTURE TYPE		DATE	

FLEX NEON LRF7 0.7" FLAT LENS INDOOR/OUTDOOR

24VDC, 2W | 5W | 7W BENDS LEFT/RIGHT STATIC WHITE, WARM DIM & TUNABLE WHITE

REV 01.27.25

Drawings: Exploded View for Flexible Aluminum Channel with 1RE J-box

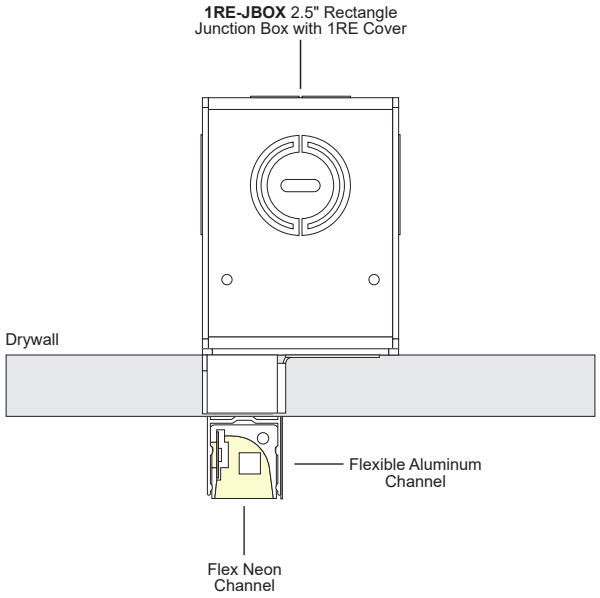

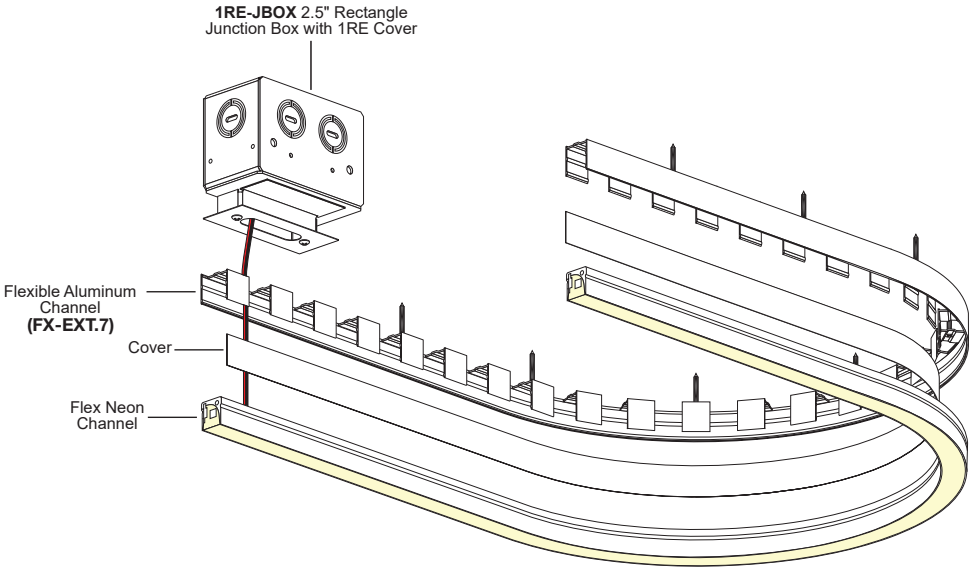

PROJECT		FIXTURE TYPE		DATE	

FLEX NEON LRF7 0.7" FLAT LENS INDOOR/OUTDOOR

24VDC, 2W | 5W | 7W BENDS LEFT/RIGHT STATIC WHITE, WARM DIM & TUNABLE WHITE

REV 01.27.25

LENGTH CHART Actual lengths for Flex Neon LRF7

LENGTH CHART - STATIC & TUNABLE WHITE									
Ordering Code (Nominal Size)	Actual Length	Ordering Code (Nominal Size)	Actual Length	Ordering Code (Nominal Size)	Actual Length	Ordering Code (Nominal Size)	Actual Length	Ordering Code (Nominal Size)	Actual Length
8	7.95	104	103.95	200	199.95	296	295.95	392	391.95
10	10.35	106	106.35	202	202.35	298	298.35	394	394.35
12	12.75	108	108.75	204	204.75	300	300.75	396	396.75
15	15.15	111	111.15	207	207.15	303	303.15	399	399.15
17	17.55	113	113.55	209	209.55	305	305.55	401	401.55
20	19.95	116	115.95	212	211.95	308	307.95	404	403.95
22	22.35	118	118.35	214	214.35	310	310.35	406	406.35
24	24.75	120	120.75	216	216.75	312	312.75	408	408.75
27	27.15	123	123.15	219	219.15	315	315.15	411	411.15
29	29.55	125	125.55	221	221.55	317	317.55	413	413.55
32	31.95	128	127.95	224	223.95	320	319.95	416	415.95
34	34.35	130	130.35	226	226.35	322	322.35	418	418.35
36	36.75	132	132.75	228	228.75	324	324.75	420	420.75
39	39.15	135	135.15	231	231.15	327	327.15	423	423.15
41	41.55	137	137.55	233	233.55	329	329.55	425	425.55
44	43.95	140	139.95	236	235.95	332	331.95	428	427.95
46	46.35	142	142.35	238	238.35	334	334.35	430	430.35
48	48.75	144	144.75	240	240.75	336	336.75	432	432.75
51	51.15	147	147.15	243	243.15	339	339.15	435	435.15
53	53.55	149	149.55	245	245.55	341	341.55	437	437.55
56	55.95	152	151.95	248	247.95	344	343.95	440	439.95
58	58.35	154	154.35	250	250.35	346	346.35	442	442.35
60	60.75	156	156.75	252	252.75	348	348.75	444	444.75
63	63.15	159	159.15	255	255.15	351	351.15	447	447.15
65	65.55	161	161.55	257	257.55	353	353.55	449	449.55
68	67.95	164	163.95	260	259.95	356	355.95	452	451.95
70	70.35	166	166.35	262	262.35	358	358.35	454	454.35
72	72.75	168	168.75	264	264.75	360	360.75	456	456.75
75	75.15	171	171.15	267	267.15	363	363.15	459	459.15
77	77.55	173	173.55	269	269.55	365	365.55	461	461.55
80	79.95	176	175.95	272	271.95	368	367.95	464	463.95
82	82.35	178	178.35	274	274.35	370	370.35	466	466.35
84	84.75	180	180.75	276	276.75	372	372.75	468	468.75
87	87.15	183	183.15	279	279.15	375	375.15	471	471.15
89	89.55	185	185.55	281	281.55	377	377.55	473	473.55
92	91.95	188	187.95	284	283.95	380	379.95	476	475.95
94	94.35	190	190.35	286	286.35	382	382.35	478	478.35
96	96.75	192	192.75	288	288.75	384	384.75	480	480.75
99	99.15	195	195.15	291	291.15	387	387.15		
101	101.55	197	197.55	293	293.55	389	389.55		

PROJECT		FIXTURE TYPE		DATE	

FLEX NEON LRF7 0.7" FLAT LENS INDOOR/OUTDOOR

24VDC, 2W | 5W | 7W BENDS LEFT/RIGHT STATIC WHITE, WARM DIM & TUNABLE WHITE

REV 01.27.25

LENGTH CHART Actual lengths for Flex Neon LRF7

LENGTH CHART - WARM DIM							
Ordering Code (Nominal Size)	**Actual Length**	**Ordering Code (Nominal Size)**	**Actual Length**	**Ordering Code (Nominal Size)**	**Actual Length**	**Ordering Code (Nominal Size)**	**Actual Length**
6	6.75	126	126.75	246	246.75	366	366.75
9	9.75	129	129.75	249	249.75	369	369.75
12	12.75	132	132.75	252	252.75	372	372.75
15	15.75	135	135.75	255	255.75	375	375.75
18	18.75	138	138.75	258	258.75	378	378.75
21	21.75	141	141.75	261	261.75	381	381.75
24	24.75	144	144.75	264	264.75	384	384.75
27	27.75	147	147.75	267	267.75	387	387.75
30	30.75	150	150.75	270	270.75	390	390.75
33	33.75	153	153.75	273	273.75	393	393.75
36	36.75	156	156.75	276	276.75	396	396.75
39	39.75	159	159.75	279	279.75	399	399.75
42	42.75	162	162.75	282	282.75	402	402.75
45	45.75	165	165.75	285	285.75	405	405.75
48	48.75	168	168.75	288	288.75	408	408.75
51	51.75	171	171.75	291	291.75	411	411.75
54	54.75	174	174.75	294	294.75	414	414.75
57	57.75	177	177.75	297	297.75	417	417.75
60	60.75	180	180.75	300	300.75	420	420.75
63	63.75	183	183.75	303	303.75	423	423.75
66	66.75	186	186.75	306	306.75	426	426.75
69	69.75	189	189.75	309	309.75	429	429.75
72	72.75	192	192.75	312	312.75	432	432.75
75	75.75	195	195.75	315	315.75	435	435.75
78	78.75	198	198.75	318	318.75	438	438.75
81	81.75	201	201.75	321	321.75	441	441.75
84	84.75	204	204.75	324	324.75	444	444.75
87	87.75	207	207.75	327	327.75	447	447.75
90	90.75	210	210.75	330	330.75	450	450.75
93	93.75	213	213.75	333	333.75	453	453.75
96	96.75	216	216.75	336	336.75	456	456.75
99	99.75	219	219.75	339	339.75	459	459.75
102	102.75	222	222.75	342	342.75	462	462.75
105	105.75	225	225.75	345	345.75	465	465.75
108	108.75	228	228.75	348	348.75	468	468.75
111	111.75	231	231.75	351	351.75	471	471.75
114	114.75	234	234.75	354	354.75	474	474.75
117	117.75	237	237.75	357	357.75	477	477.75
120	120.75	240	240.75	360	360.75	480	480.75
123	123.75	243	243.75	363	363.75		

PROJECT		FIXTURE TYPE		DATE	

FLEX NEON OUTDOOR ACCESSORIES

24VDC, 2W | 5W | 7W BENDS LEFT/RIGHT STATIC WHITE, WARM DIM & TUNABLE WHITE

REV 01.27.25

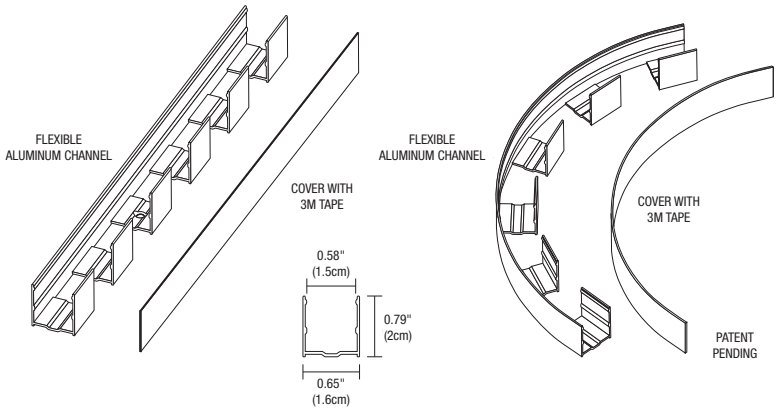

FLEXIBLE ALUMINUM CHANNEL

Flexible aluminum channel is designed to work specifically with Flex Neon for practical and professional surface mounting. The channel can make 4 inch radius, 90° turns, and sweeping bends that follow the form of architectural details, soffits, signage and more.
Patent Pending.

Product		Length		Finish
FX-EXT.7	–	**4FT**	–	**WH**
FX-EXT.7 Flexible Extrusion 0.7" Wide		**4FT** 4 Feet		**BK** Black **WH** White

DIRECT BURIAL LOCATION CABLE ORDER PER FOOT

Our Direct Burial, 2 Conductor Plus ground, 12 Gauge Cable is a durable and adaptable cable suitable for transmitting power, control, and switching in outdoor wet and in ground environments. Keep within 60 ft between fixture and power supply. Cable sold by the foot, simply specify the length needed by the foot. Not compatible with Tunable White.

Product		Gauge		Cable
DB	–	**12G**	–	**2C**
DB Direct Burial		**12G** 12 Gauge		**2C** 2 Conductor

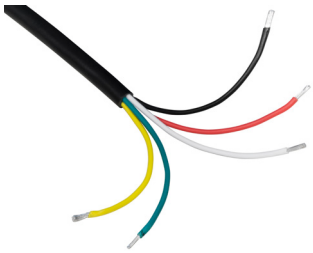

WET AND DAMP LOCATION CABLE ORDER PER FOOT

Our Wet Location, 5 Conductor, 14 Gauge Cable is a durable and adaptable cable suitable for transmitting power, control, and switching in indoor and outdoor wet and damp environments. Keep within 50ft between fixture and power supply. Cable sold by the foot, simply specify the length needed. For use with Tunable White.

Product		Gauge		Cable
OC	–	**14G**	–	**5C**
OC Outdoor Cable		**14G** 14 Gauge		**5C** 5 Conductor

PROJECT		FIXTURE TYPE		DATE	

FLEX NEON OUTDOOR ACCESSORIES

24VDC, 2W | 5W | 7W BENDS LEFT/RIGHT STATIC WHITE, WARM DIM & TUNABLE WHITE

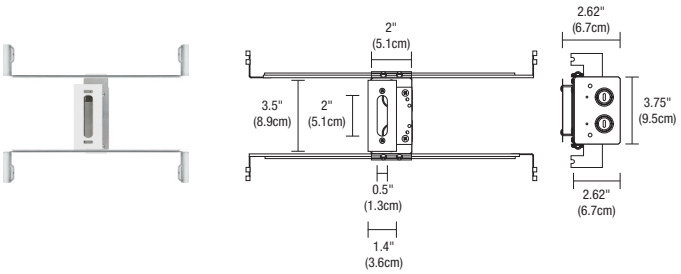

1" RECTANGLE CANOPY & J-BOX*

The Slim-Profile Junction Box with Hanger Bars mounts to studs spaced between 14.5" and 25" apart behind drywall. Allows low voltage DC wires from Remote Power Supply to connect to channel wires. The Junction Box opening is covered by the fixture for a clean, safe connection. Includes a Goof Plate, for poor plastering around J-box.

*Only to be used with Seamless Indoor Bottom Lead-In and Out

Product		Canopy		Product
C	–	1RE	–	JBOX
C Channel		**1RE** 1" Rectangle		**JBOX** Junction Box

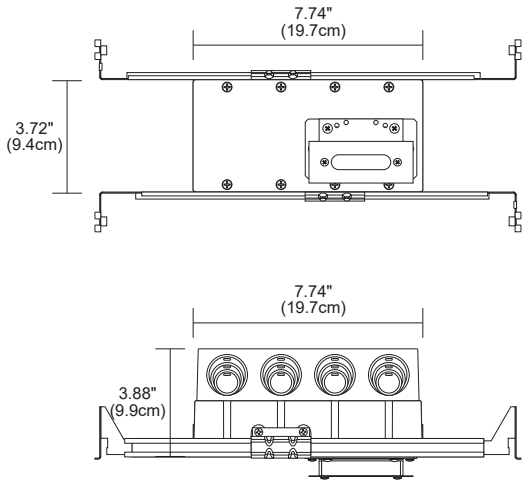

1" RECTANGLE CANOPY WITH 4 GANG JUNCTION BOX AND PURE SMART WIZ PRO CV BRIDGEBOX

The slim profile 1RE Canopy with 4 Gang Junction Box come with adjustable hanger bars and a Pure Smart WiZ Pro CV Bridgebox allowing wireless control of Flex Neon. Two Class 2, 14AWG stranded conductors from the Remote Power Supply up to 40 ft away are required.

System		Type		Wattage		Control		Color Temperature		System Code
C	–	1RE4G	–	96W	–	WZ	–	DW	–	FN
C Channel		**1RE4G** 1" Rectangle Canopy with 4 Gang Junction Box		**96W** 96 Watts		**WZ** WiZ Pro Connected CV Smart Bridgebox Included		**DW** Static White **TW** Tunable white		**FN** Flex Neon

WET LOCATION JUNCTION BOX

Wet-rated low voltage Splice Box with connectors.

Product		Type		Option
2RE	–	JBOX	–	W
2RE 2" Rectangle		**JBOX** Junction Box		**W** Wet Location

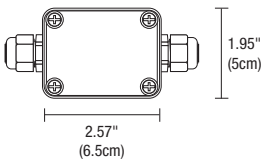

Top

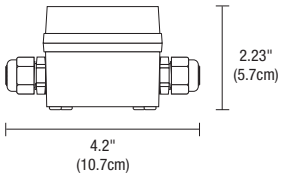

Profile

PROJECT		FIXTURE TYPE		DATE	

FLEX NEON OUTDOOR ACCESSORIES

24VDC, 2W | 5W | 7W BENDS LEFT/RIGHT STATIC WHITE, WARM DIM & TUNABLE WHITE

WET LOCATION JUNCTION BOX WITH 6" POWER CABLE

This watertight, multi-fixture Junction Box is especially designed for lighting in wet and damp locations. It is versatile, rugged and simple to install. The Junction Box comes standard with a 6" Flexible Cable providing easy, safe, and reliable connections for 24V low voltage luminaires. This box is approved for indoor and outdoor usage and complies with all the requirements of UL1241 and the National Electric Code.

Static White & Warm Dim

Product		Canopy		Product		Size		Option
SS	–	2RE	–	JBOX	–	6IN	–	W
SS LED Soft Strip Flex Neon		**2RE** 2" Rectangle		**JBOX** Junction Box		**6IN** 6" Four Wire Connection **96IN** 96" Four Wire Connection		**W** Wet Location

All Other Color Temperatures

Product		Canopy		Product		Size		Color Temperature		Option
SS	–	2RE	–	JBOX	–	6IN	–	RGBW	–	W
SS LED Soft Strip Flex Neon		**2RE** 2" Rectangle		**JBOX** Junction Box		**6IN** 6" Five Wire Connection **96IN** 96" Five Wire Connection		**RGBW** Red, Green, Blue & Tunable White		**W** Wet Location

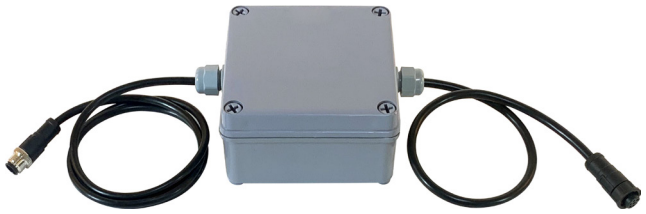

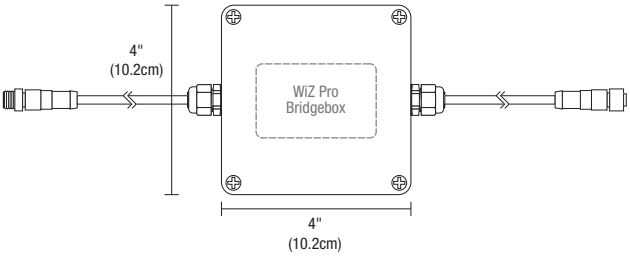

PURE SMART WET LOCATION JUNCTION BOX WITH 8FT POWER CABLE AND WIZ PRO UR BRIDGEBOX

This watertight Junction Box is especially designed for lighting in wet and damp locations. The Junction Box comes standard with a 8ft of outdoor cable and both male and female barrel connectors providing easy, safe, and reliable connections for 24V low voltage luminaires. Included with the Junction Box is one WiZ Pro type Bridgebox allowing wireless control of Flex Neon. This box is approved for indoor and outdoor usage and complies with all the requirements of UL1241 and the National Electric Code.

Product		Type		Wattage		Controls		Color Temperature		Option		System
BR	–	JBC	–	96W	–	WZ	–	DW	–	W	–	FN
BR Bridgebox for LED Soft Strip and Flex Neon		**JBC** Outdoor Junction Box with Two Barrel Connectors		**96W** 96 Watts		**WZ** Wiz Connected Bridgebox Included		**DW** Static White **TW** Tunable white		**W** Wet Location		**FN** Flex Neon

PROJECT		FIXTURE TYPE		DATE	

FLEX NEON OUTDOOR ACCESSORIES AND J-BOXES

24VDC, 2W | 5W | 7W BENDS LEFT/RIGHT STATIC WHITE, WARM DIM & TUNABLE WHITE

REV 01.27.25

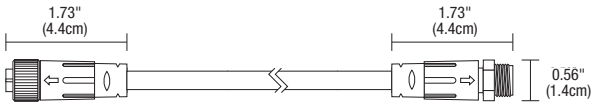

POWER CABLE CONNECTOR WET LOCATION

The flexible power cable connector is designed to work in outdoor environments for safe and reliable connections. This Flexible Connector is easy to install and configure, helping you create innovative lighting designs in an outdoor commercial or residential space.

Static White & Warm Dim

Product		Type		Size		Conductor	Option
SS	–	CFX	–	16IN	–	2C	W
SS Soft Strip and Flex Neon		**CFX** Flexible Connector		**16IN** 16" **96IN** 96"		**2C** 2 Conductor	**W** Wet Location

All Other Color Temperatures

Product		Type		Size		Conductor	Option
SS	–	CFX	–	16IN	–	6C	W
SS Soft Strip and Flex Neon		**CFX** Flexible Connector		**16IN** 16" **96IN** 96"		**6C** 6 Conductor	**W** Wet Location

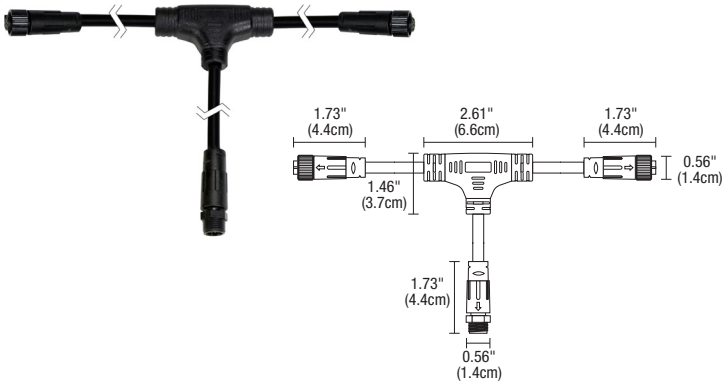

WET LOCATION T-CONNECTOR

Our Wet Location T-Connector is a robust rugged design especially suited to withstand the challenges of damp and wet environments. This unique T-Connector has one Male and two Female Connectors and is suitable for multiple indoor and outdoor uses. Versatile design is easy to use, making installation quick and efficient.

Static White & Warm Dim

Product		Type		Size		Size	Option
SS	–	CFX	–	4IN	–	2YC	W
SS Soft Strip and Flex Neon		**CFX** Flexible Connector		**4IN** 4"		**2YC** Y-Shape 2 Conductor	**W** Wet Location

All Other Color Temperatures

Product		Type		Size		Size	Option
SS	–	CFX	–	4IN	–	6YC	W
SS Soft Strip and Flex Neon		**CFX** Flexible Connector		**4IN** 4"		**6YC** Y-Shape 6 Conductor	**W** Wet Location

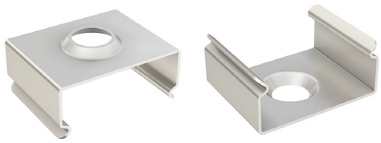

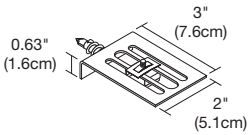

MOUNTING CLIPS

NX.5-MCL mounting clips are provided with every 12" of Flex Neon and may be ordered separately as replacement parts.

System		Product
NX.5	–	MCL
NX.5 Flex Neon .5" Mounting Clip		**MCL** Mounting Clip

FLEX NEON TIE STRAP

Use for mounting to poles for extra support, every 6"-12" (30 per package).

Product		Type
SS	–	ST
SS LED Flex Neon		**ST** Tie Strap

PROJECT		FIXTURE TYPE		DATE	

FLEX NEON OUTDOOR ACCESSORIES AND J-BOXES

24VDC, 2W | 5W | 7W BENDS LEFT/RIGHT STATIC WHITE, WARM DIM & TUNABLE WHITE

REV 01.27.25

INDOOR WIRING DIAGRAMS

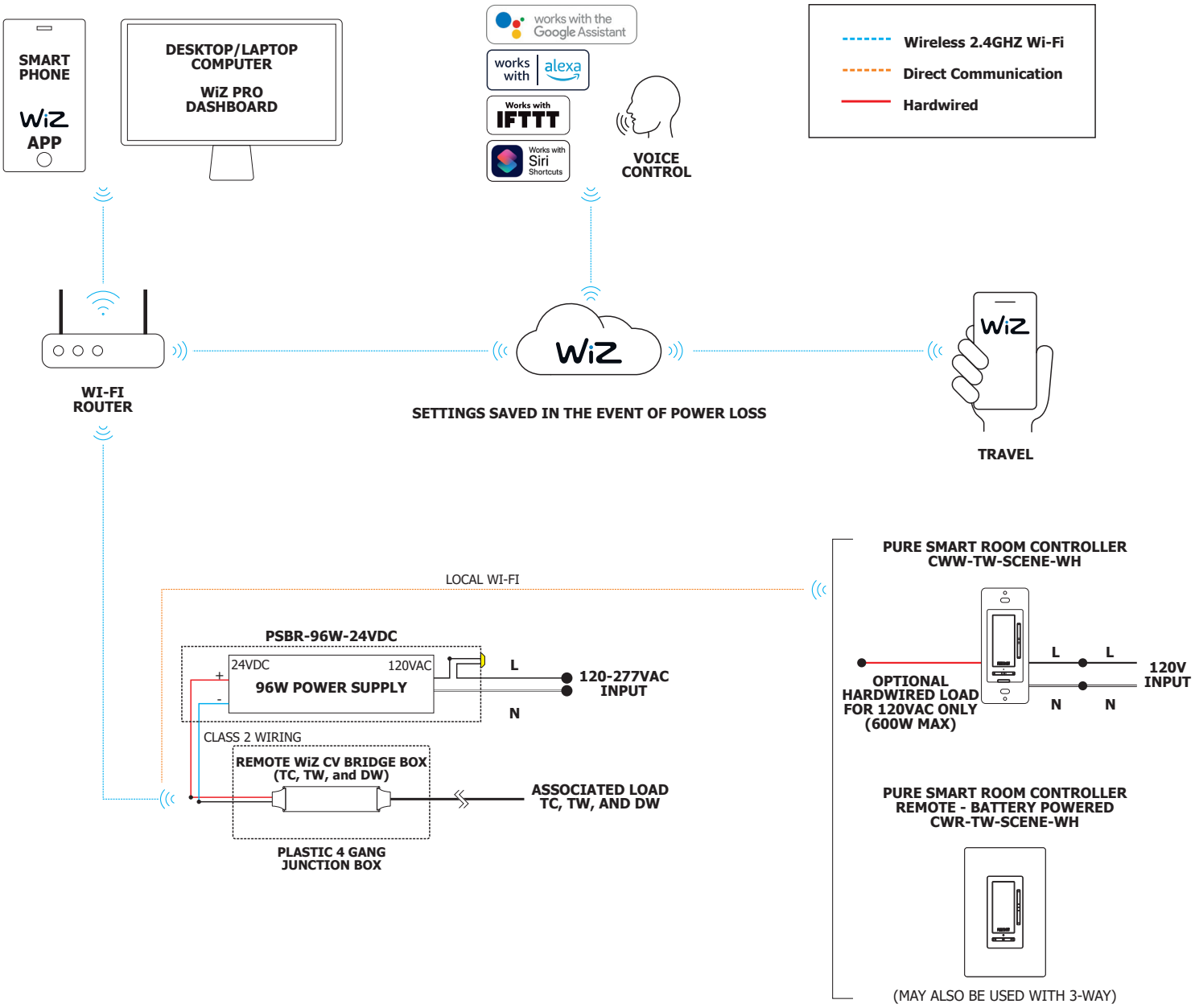

PROJECT		FIXTURE TYPE		DATE	

FLEX NEON OUTDOOR ACCESSORIES AND J-BOXES

24VDC, 2W | 5W | 7W BENDS LEFT/RIGHT STATIC WHITE, WARM DIM & TUNABLE WHITE

REV 01.27.25

OUTDOOR WIRING DIAGRAMS

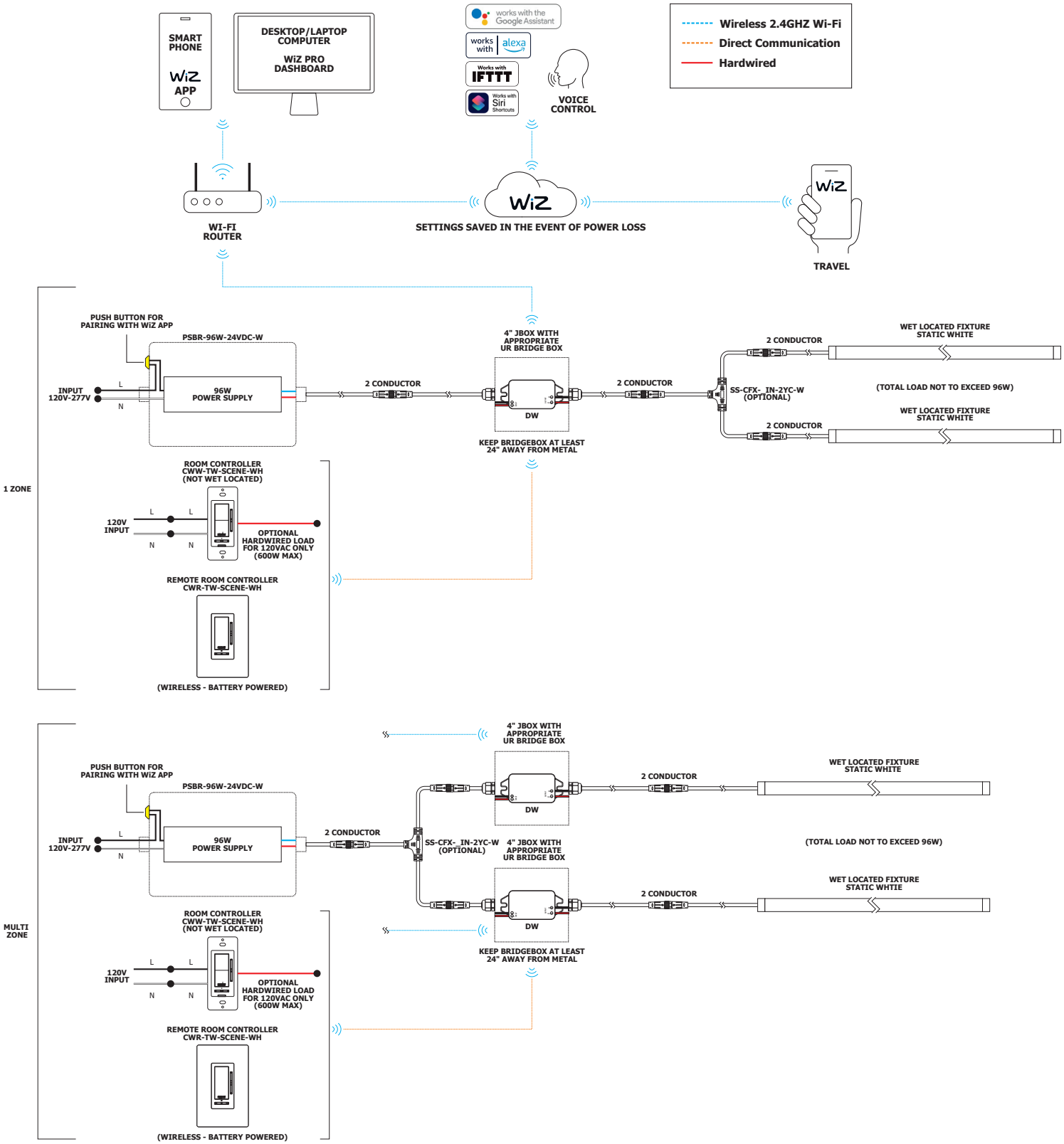

PROJECT		FIXTURE TYPE		DATE	

FLEX NEON OUTDOOR ACCESSORIES AND J-BOXES

24VDC, 2W | 5W | 7W BENDS LEFT/RIGHT STATIC WHITE, WARM DIM & TUNABLE WHITE

REV 01.27.25

OUTDOOR WIRING DIAGRAMS

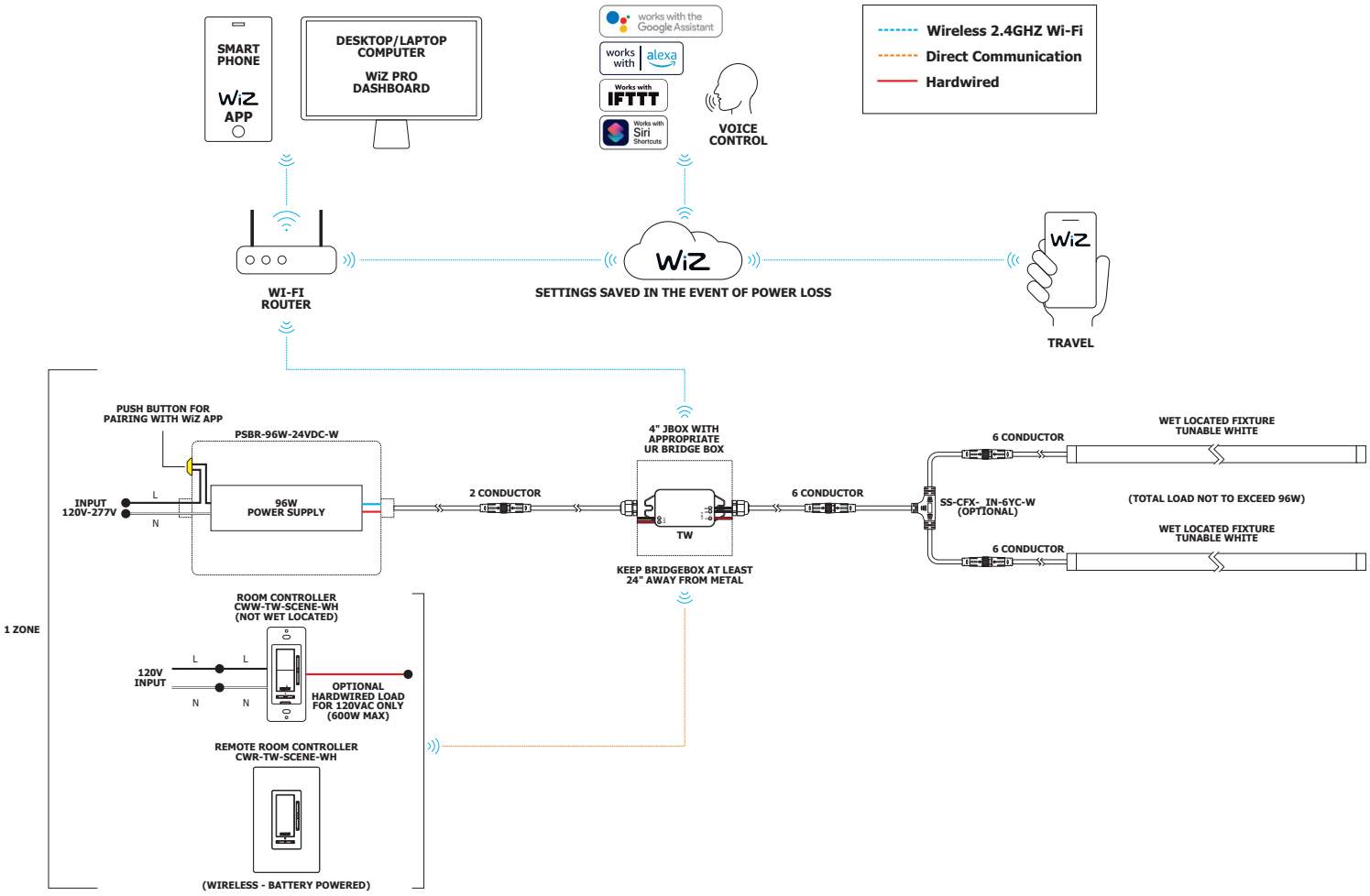

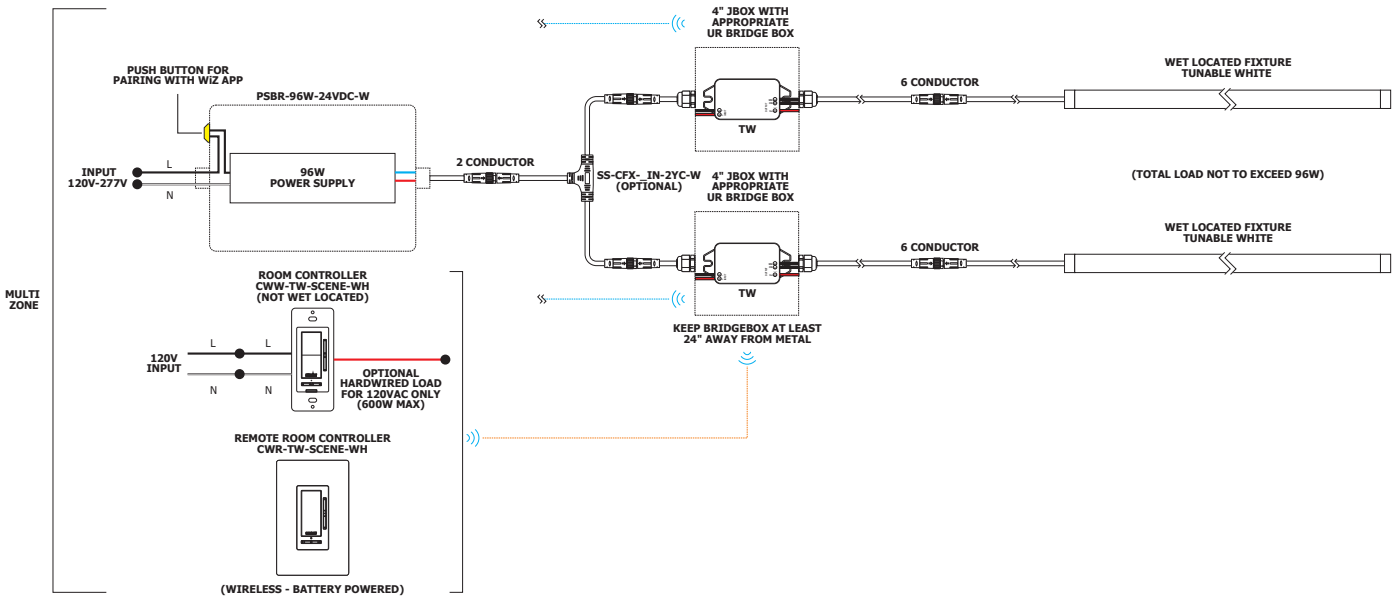

PROJECT		FIXTURE TYPE		DATE	

LED STRIP TM30 DATA

24VDC, STATIC WHITE, WARM DIM & DYNAMIC/TUNABLE WHITE

REV 01.28.25

TM-30-15 DATA: The data below is for ST2A, ST5A, ST7A and ST10A bare LED Soft Strips. Consistent color temperatures throughout a single strip and among multiple strips is possible through a 3 phase binning process in which each order is inspected with a color meter to ensure uniformity.

2200K | Rf: 90.5 | Rg: 99.9

Color Vector Graphic

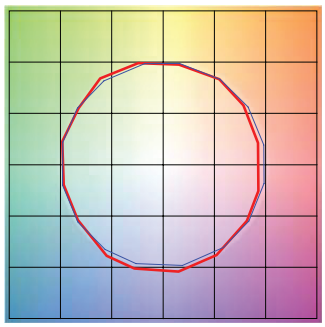

Test Reference

		GRAPHIC SHIFTS %	
HUE BIN	Rf	CHROMA	HUE
1	88.3	-5.2%	1.0%
2	90.1	-3.6%	3.7%
3	87.5	-0.5%	5.6%
4	93.9	-1.2%	1.3%
5	94.7	0.7%	2.1%
6	93.7	2.6%	0.7%
7	93.5	-1.5%	-2.2%
8	97.8	-0.4%	-0.2%
9	93.7	-1.5%	2.4%
10	90.8	-0.8%	4.9%
11	89.3	3.7%	5.4%
12	90.2	4.6%	1.0%
13	89.0	4.4%	-9.7%
14	75.4	0.6%	-15.1%
15	90.7	-1.7%	-5.0%
16	84.2	-4.4%	-9.1%

2400K | Rf: 90.2 | Rg: 99.3

Color Vector Graphic

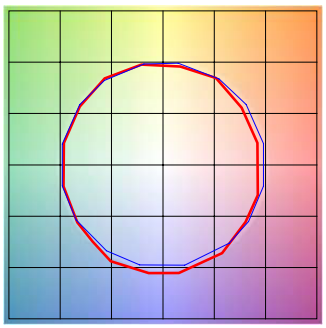

Test Reference

		GRAPHIC SHIFTS %	
HUE BIN	Rf	CHROMA	HUE
1	89.0	-4.8%	1.1%
2	90.4	-3.7%	3.2%
3	88.1	-0.7%	5.2%
4	93.0	-2.1%	0.9%
5	94.5	-0.1%	2.0%
6	94.7	1.7%	0.6%
7	93.7	-1.9%	-1.5%
8	96.8	-1.2%	0.2%
9	91.9	-1.8%	3.7%
10	88.8	-0.9%	6.1%
11	87.5	3.8%	7.1%
12	89.6	4.3%	0.3%
13	88.1	4.2%	-9.1%
14	82.5	2.8%	-10.6%
15	91.4	-2.1%	-4.2%
16	84.0	-3.6%	-9.9%

2700K | Rf: 89.5 | Rg: 98.3

Color Vector Graphic

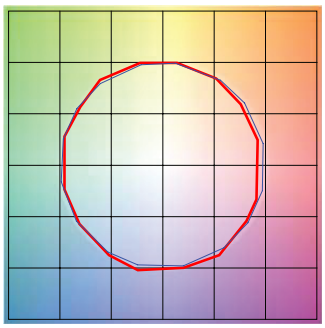

Test Reference

		GRAPHIC SHIFTS %	
HUE BIN	Rf	CHROMA	HUE
1	88.6	-5.2%	0.9%
2	90.3	-3.6%	2.9%
3	88.4	-1.5%	5.0%
4	91.9	-2.5%	1.4%
5	93.5	-0.9%	2.3%
6	95.7	0.9%	-0.4%
7	91.1	-3.7%	-0.5%
8	95.8	-2.0%	0.4%
9	90.5	-2.6%	4.5%
10	84.9	-1.1%	8.7%
11	85.0	2.3%	9.8%
12	88.1	5.5%	1.5%
13	90.9	2.9%	-5.2%
14	86.2	4.3%	-8.9%
15	90.7	-2.4%	-3.6%
16	83.0	-2.7%	-11.3%

3000K | Rf: 88.7 | Rg: 98.2

Color Vector Graphic

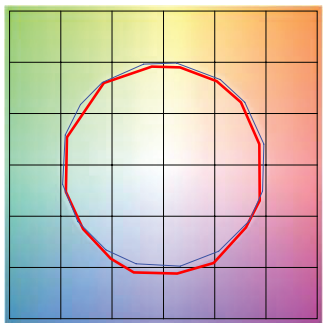

Test Reference

		GRAPHIC SHIFTS %	
HUE BIN	Rf	CHROMA	HUE
1	88.3	-5.2%	0.8%
2	90.2	-3.7%	2.7%
3	88.3	-1.6%	4.9%
4	92.2	-2.0%	1.8%
5	91.0	-3.5%	1.8%
6	95.8	0.4%	-0.4%
7	90.2	-4.4%	-0.0%
8	94.8	-2.6%	0.8%
9	89.2	-2.9%	6.0%
10	81.4	-1.5%	9.7%
11	82.9	2.3%	10.5%
12	88.3	6.7%	1.9%
13	91.9	2.8%	-4.0%
14	86.3	4.9%	-8.3%
15	87.1	-1.2%	-6.1%
16	83.2	-1.7%	-11.6%

3500K | Rf: 88.1 | Rg: 97.1

Color Vector Graphic

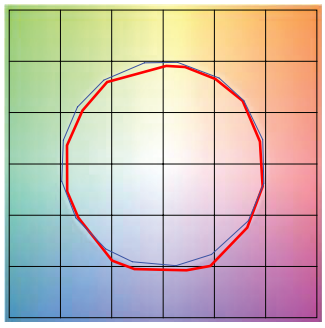

Test Reference

		GRAPHIC SHIFTS %	
HUE BIN	Rf	CHROMA	HUE
1	87.8	-5.2%	1.0%
2	90.8	-3.3%	2.3%
3	89.8	-1.6%	3.9%
4	91.0	-2.7%	0.9%
5	90.0	-5.4%	0.7%
6	95.6	-0.9%	-0.4%
7	90.0	-5.3%	1.4%
8	91.8	-3.6%	3.0%
9	87.1	-2.9%	7.3%
10	80.1	-1.3%	12.2%
11	81.8	4.1%	10.5%
12	88.2	5.1%	2.3%
13	92.4	2.1%	-3.8%
14	86.6	5.0%	-7.9%
15	86.2	-0.7%	-6.8%
16	84.5	-2.1%	-7.0%

5700K | Rf: 87.6 | Rg: 98.0

Color Vector Graphic

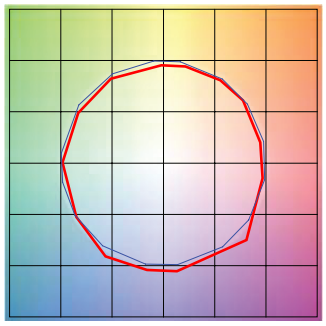

Test Reference

		GRAPHIC SHIFTS %	
HUE BIN	Rf	CHROMA	HUE
1	87.9	-3.9%	1.5%
2	92.3	-1.7%	2.7%
3	91.0	-1.2%	2.4%
4	91.5	-1.2%	1.6%
5	86.2	-5.9%	-0.4%
6	93.5	-3.2%	-0.2%
7	93.1	-3.8%	0.6%
8	85.9	-4.6%	5.9%
9	83.6	-4.0%	12.7%
10	75.8	-0.6%	13.6%
11	80.2	4.3%	10.4%
12	83.4	3.4%	1.8%
13	90.8	5.0%	-2.0%
14	91.8	1.3%	-3.3%
15	79.4	8.6%	-12.7%
16	93.4	-2.7%	-0.2%

PROJECT		FIXTURE TYPE		DATE	

LED STRIP TM30 DATA

24VDC, STATIC WHITE, WARM DIM & DYNAMIC/TUNABLE WHITE

REV 01.28.25

TM-30-15 DATA: The data below is for ST2A, ST5A, ST7A and ST10A bare LED Soft Strips. Consistent color temperatures throughout a single strip and among multiple strips is possible through a 3 phase binning process in which each order is inspected with a color meter to ensure uniformity.

2700D | Rf: 90.7 | Rg: 101.1

Color Vector Graphic

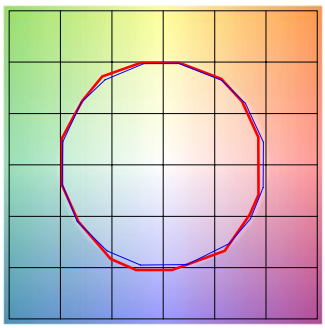

Test Reference

		GRAPHIC SHIFTS %	
HUE BIN	Rf	CHROMA	HUE
1	90.9	-4.1%	1.1%
2	91.8	-2.2%	3.2%
3	89.0	0.2%	5.0%
4	92.9	-1.1%	0.8%
5	93.9	1.1%	1.7%
6	93.3	3.3%	0.0%
7	93.1	-0.5%	-1.9%
8	97.2	-0.3%	-0.9%
9	93.4	-1.0%	3.2%
10	89.9	-0.1%	5.6%
11	87.0	4.7%	7.2%
12	89.2	5.8%	-0.2%
13	89.1	3.5%	-6.7%
14	86.3	4.1%	-9.2%
15	91.4	-2.0%	-3.6%
16	84.7	-2.1%	-10.3%

3000D | Rf: 90.6 | Rg: 101.1

Color Vector Graphic

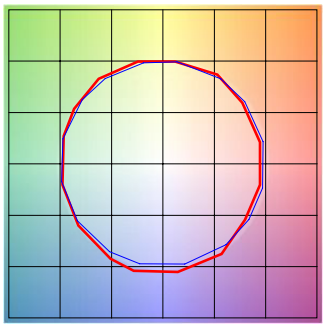

Test Reference

		GRAPHIC SHIFTS %	
HUE BIN	Rf	CHROMA	HUE
1	91.5	-3.5%	1.3%
2	92.2	-1.8%	3.0%
3	89.3	0.5%	4.8%
4	92.7	-1.1%	0.6%
5	93.3	0.5%	1.4%
6	93.8	2.7%	-0.8%
7	91.2	-2.1%	-0.2%
8	97.0	-0.5%	-0.7%
9	92.5	-0.7%	3.8%
10	88.3	0.9%	7.1%
11	87.5	3.9%	7.6%
12	88.2	6.2%	-0.2%
13	89.9	3.4%	-6.0%
14	86.9	4.4%	-8.5%
15	91.9	-1.9%	-2.9%
16	84.7	-1.3%	-10.6%

PROJECT		FIXTURE TYPE		DATE	