MTGC48 MicroTrack™ GROOVE CEILING

48VDC CLASS 2, SINGLE CIRCUIT, CEILING MOUNT TRACK SYSTEM

PROJECT

FIXTURE TYPE

DATE

ASSEMBLED IN AMERICA

REV 08.17.26

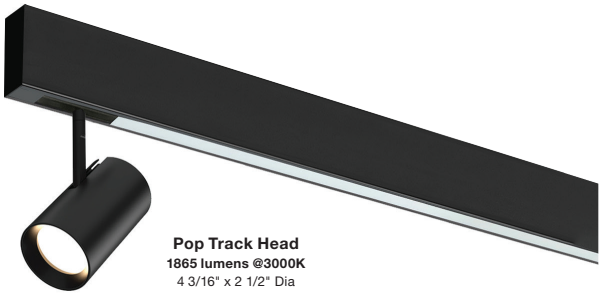

Pop Track Head
1865 lumens @3000K
4 3/16" x 2 1/2" Dia

DESCRIPTION

MicroTrack™ Groove Ceiling is a surface mounted channel with a larger profile or 13/16" x 1 9/16", that is engineered to house our high-lumen Light Bars seamlessly within the track, alongside track heads, in a 48VDC Class 2 system. For a refined architectural look, each Track Channel includes a paintable Slot Cover that conceals the 12 AWG copper busbars and mounting hardware. For custom quotes and layout assistance, send your drawings and ideas to our design team: design@PureEdgeLighting.com.

FEATURES

- Track Heads easily attach to the track and adjust, tilt, and rotate. Light Bars and Teeny track heads can be installed with one hand (no screwdriver necessary)
- Designed for use with Class 2, 48VDC Universal Remote Power Supplies up to 40' away with low voltage wire
- Power offered with an End Feed or Center Feed. Use up to 2 x 96W Remote Power Supplies with Center Feed before re-feeding
- Straight Channels are available in 4' (44") and 8' (92") lengths, with the ability to be cut in the field
- Curved Channels are available in 12" and 20" radii
- Includes an opaque Slot Cover to conceal the 12 AWG copper busbars and mounting screws
- T-Bar MicroTrack™ fits on 9/16" and 15/16" T-Bar ceiling with MTGT48 TRACK (1/8" higher track)

LAMP

- Lumens: Up to 1865 lm at 3000K
- Lumens Per Watt: Up to 124 lm/w at 3000K
- CRI: Minimum 90 color rendering index
- CCT: 2400K, 2700K, 3000K, 3500K, 4000K (Warm Dim available for 3000K) color temperature with a great color consistency (within 3.0– step MacAdam ellipse)
- LED Lamp Life: Minimum 50,000hr with 85% of lumen maintenance in 25C ambient temperature, in compliance with IES LM-80 testing measurements

FINISH & MATERIAL

- Slot Cover: Black or Matte White PVC
- Extruded Aluminum Channel, conductors are a pair of #12 Gauge Copper Busbars

POWER SUPPLY AND DIMMING (SOLD SEPARATELY)

2 x 96W 48VDC, Remote Power

- 48VDC UNI Driver: Universal Dimming (ELV, TRIAC, 0-10V)
  ELV & TRIAC Smart Dimmer & Switch
- 2-in-1 Power Driver and Dimmer

APPLICATIONS

Indoor use only. Ideal applications in residential, commercial, retail and hospitality environments.

WARRANTY / LABELS

5 year pro-rated warranty. Assembled in America
ETL (Conforms to UL 1598 and CSA 22.2 #250.0), Class 2 Under 100 Watts, Title 24

MTGC48 MicroTrack™ GROOVE CEILING

48VDC CLASS 2, SINGLE CIRCUIT, CEILING MOUNT TRACK SYSTEM

PROJECT

FIXTURE TYPE

DATE

REV 08.17.26

COMPONENTS

MICROTRACK™ GROOVE CHANNEL 48VDC

SLOT COVER PROVIDED

STRAIGHT CONNECTOR

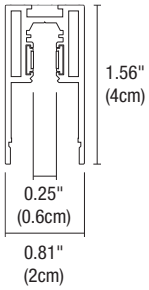

STRAIGHT 1 CIRCUIT CHANNEL

Groove track is engineered to house our high-lumen Light Bars seamlessly within the track, alongside track heads designed for use within an extruded aluminum channel, with 12 AWG busbars to help eliminate voltage drop. For use with 48VDC Remote Power Supply, sold separately. Includes a Joiner Connector, an End Cap, a Straight Connector, and paintable opaque Slot Covers to conceal conductive connectors and track slots.

System		Circuit		Length in Feet		Finish
MTGC48	–	**1C**	–	**8FT**	–	**BK**
MTGC48 MicroTrack Groove Ceiling Mount 48VDC **MTGT48** MicroTrack Groove with T-Bar Clip, one every 2ft		**1C** Single Circuit		**4FT** 44" **8FT** 92"		**BK** Black **MW** Matte White RAL 9003

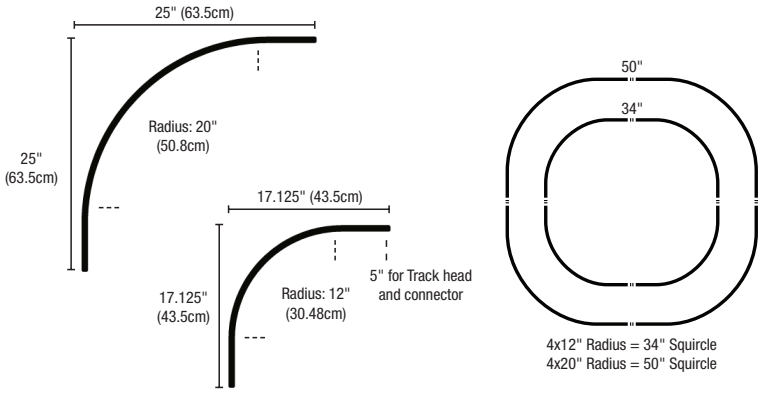

CURVE 1 CIRCUIT CHANNEL

May be used with Groove Flex Light. Comes with one Joiner and one Straight Connector.

System		Circuit		Radius in Inches		Finish
MTGC48	–	**1C**	–	**12R**	–	**BK**
MTGC48* MicroTrack Suspension Curved 48V **MTGT48*** MicroTrack Groove with T-Bar Clip, one every 2ft		**1C** Single Circuit		**12R** 12" Radius **20R** 20" Radius **24R** 24" Radius		**BK** Black **MW** Matte White RAL 9003

*Curved track is not compatible with a Slot Cover

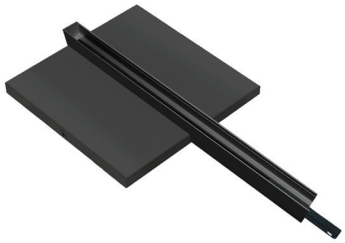

4SQ CANOPY

1RE CANOPY

END OR CENTER POWER FEED

The End Power Feed delivers 48VDC from a single 96-watt remote power supply, while the Center Power Feed supports up to two 96-watt, 48VDC remote power supplies. Both options are Class 2 with Power supplies on the same line voltage circuit (same phase). Includes Straight Connector, End Power, Joiner, and a Slot Cover.

System		Circuit & Type		Canopy		Canopy & Track Finish
MTGC48	–	**EP**	–	**4SQ**	–	**BK**
MTGC48 MicroTrack Groove Ceiling 48VDC **MTGT48** MicroTrack Groove with T-Bar Clip		**EP** End Power Feed Single Circuit **CP1** Center Power Feed Single Circuit **CP2** Two Center Power Feeds both directions **CPT1** Center T Power Feed, 1 Direction power with 12" long tracks **CPT2** Center T Power Feed, 2 Direction power with 12" long tracks **CPT3** Center T Power Feed, 3 Direction power with 12" long tracks **CPX1** Center X Power Feed, 1 Direction power with 12" long tracks **CPX2** Center X Power Feed, 2 Direction power with 12" long tracks **CPX3** Center X Power Feed, 3 Direction power with 12" long tracks **CPX4** Center X Power Feed, 4 Direction power with 12" long tracks		**4SQ** 4.5" Square Junction Box Cover **1RE*** 1" Rectangle Junction Box Cover (Jbox Plaster Ring included) *Cannot be used with T-Bar Track, T Power Feeds, or X Power Feeds		**BK** Black **MW** Matte White RAL 9003

MTGC48 MicroTrack™ GROOVE CEILING

48VDC CLASS 2, SINGLE CIRCUIT, CEILING MOUNT TRACK SYSTEM

PROJECT

FIXTURE TYPE

DATE

REV 08.17.26

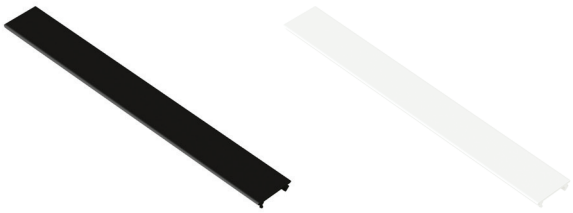

OPAQUE SLOT COVER (INCLUDED WITH EACH TRACK)

Slot Covers included to conceal conductor and track slots.

System		Type		Length in Feet		Cover Color
MTG48	–	**SCO**	–	**8FT**	–	**BK**
MTG48 MicroTrack Groove 48VDC		**SCO** Opaque Cover for Track Slot		**8FT** 8'		**BK** Black **MW** Matte White RAL 9003

ACCESSORIES

L-CONNECTOR

VERTICAL CONNECTOR

L-SHAPED / VERTICAL CONNECTORS

L-Shaped and Vertical 48VDC Connector joins two sections of track at 90°

System		Circuit		Type		Finish
MTG48	–	**1C**	–	**LC**	–	**BK**
MTG48 MicroTrack Groove 48VDC		**1C** Single Circuit		**LC** L-Connector Conductive **LNC** L-Connector Non-Conductive **VC** Vertical Connector Conductive **VNC** Vertical Connector Non-Conductive **TNC** T-Connector Non-Conductive **XNC** X-Connector Non-Conductive **TC2** T-Connector Conductive 2 Ways **XC2** X-Connector Conductive 2 Ways	**BK** Black **MW** Matte White RAL 9003

FLEX CONNECTOR

Flexable 48VDC Connector joins two sections of track at any angle.

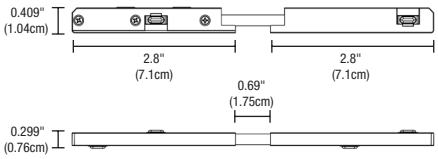

System		Circuit		Type		Finish
MT48	–	**1C**	–	**FXC**	–	**BK**
MT48 MicroTrack 48VDC		**1C** Single Circuit		**FXC** Flex Connector		**BK** Black **MW** Matte White RAL 9003

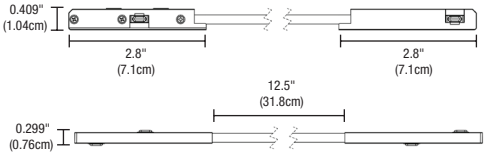

System		Circuit		Type		Finish
MT48	–	**1C**	–	**FXCL**	–	**BK**
MT48 MicroTrack 48VDC		**1C** Single Circuit		**FXCL** Flex Connector Long 12"		**BK** Black **MW** Matte White RAL 9003

ADDITIONAL PARTS

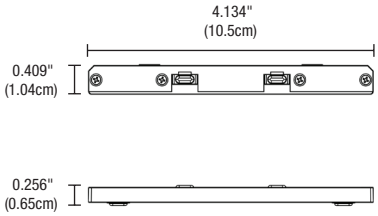

STRAIGHT CONNECTOR (INCLUDED WITH EACH TRACK)

Straight 48VDC Connector joins two track sections end to end and is concealed by the Slot Covers.

System		Circuit		Type		Finish
MT48	–	**1C**	–	**SC**	–	**BK**
MT48 MicroTrack 48VDC		**1C** Single Circuit		**SC** Straight Connector Conductive **SNC** Straight Connector Non-Conductive		**BK** Black **MW** Matte White RAL 9003

MTGC48 MicroTrack™ GROOVE CEILING

48VDC CLASS 2, SINGLE CIRCUIT, CEILING MOUNT TRACK SYSTEM

PROJECT

FIXTURE TYPE

DATE

REV 08.17.26

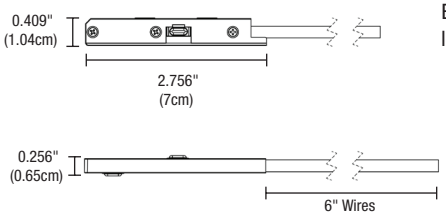

END POWER CONNECTOR (INCLUDED WITH POWER FEED)

End Power feed up to 96 watts at 48VDC. Can be used to replace lost part.

System		Circuit		Type		Finish
MT48	–	1C	–	EP	–	BK
MT48 MicroTrack 48VDC		**1C** Single Circuit		**EP** End Power Feed		**BK** Black **MW** Matte White RAL 9003

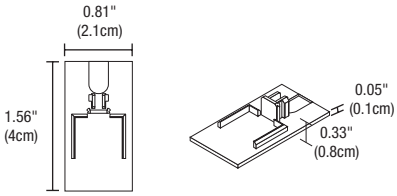

END CAPS (INCLUDED WITH EACH TRACK)

System		Circuit		Type		Finish
MTG48	–	1C	–	CA	–	BK
MTG48 MicroTrack Groove 48VDC		**1C** Single Circuit		**CA** End Cap		**BK** Black **MW** Matte White RAL 9003

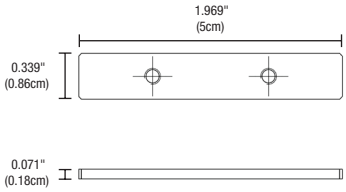

REINFORCEMENT JOINER (INCLUDED WITH EACH TRACK)

Reinforcement joiner used for cutting and mechanically joining two tracks together.

System		Type
MT48	–	J1
MT48 MicroTrack 48VDC		**J1** Reinforcement Joiner

T-BAR CEILING MOUNTING CLIP (INCLUDED WITH THE MTGT48 TRACK)

For 15/16" and 9/16" ceiling grid.

System		Component		Type		Finish
MT48	–	MCL	–	TBA	–	BK
MT48 MicroTrack 48VDC		**MCL** Mounting Clip		**TBA** T-Bar Clip		**BK** Black **MW** Matte White RAL 9003

MTGC48 MicroTrack™ GROOVE CEILING

48VDC CLASS 2, SINGLE CIRCUIT, CEILING MOUNT TRACK SYSTEM

PROJECT

FIXTURE TYPE

DATE

REV 08.17.26

WIRING DIAGRAM - 48V POWER SUPPLY

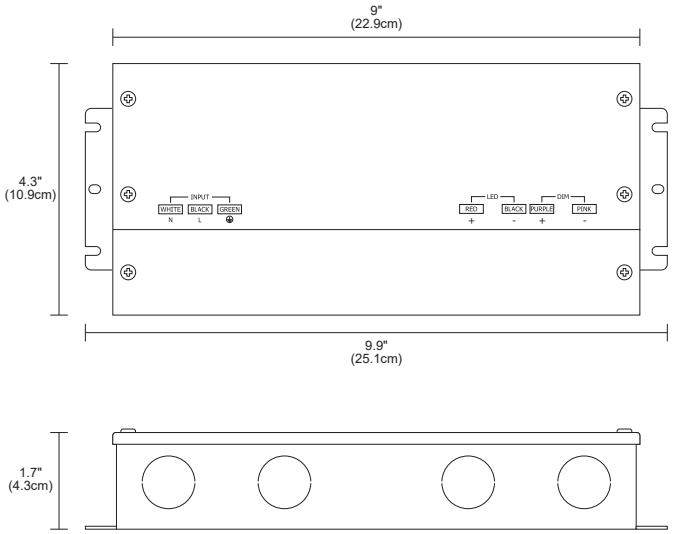

WIRING DIAGRAM - ELV WIRING

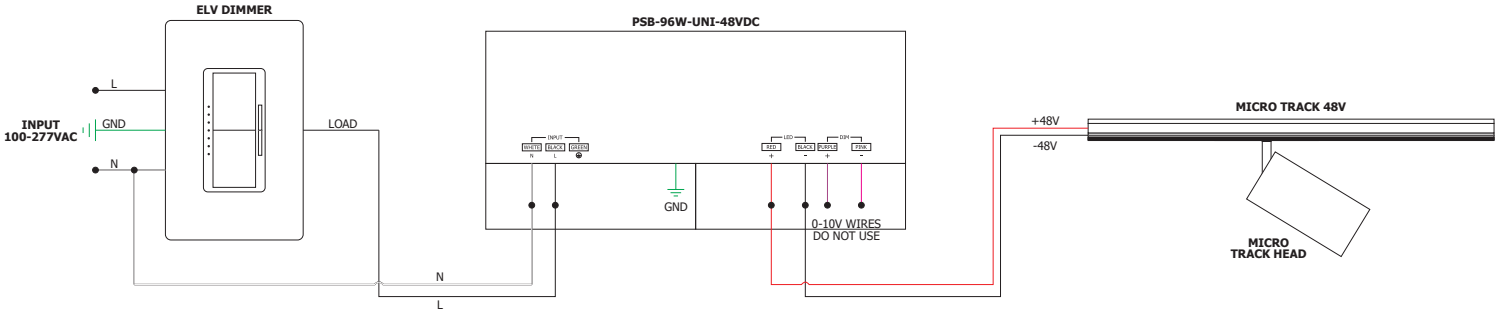

WIRING DIAGRAM - 0-10V WIRING

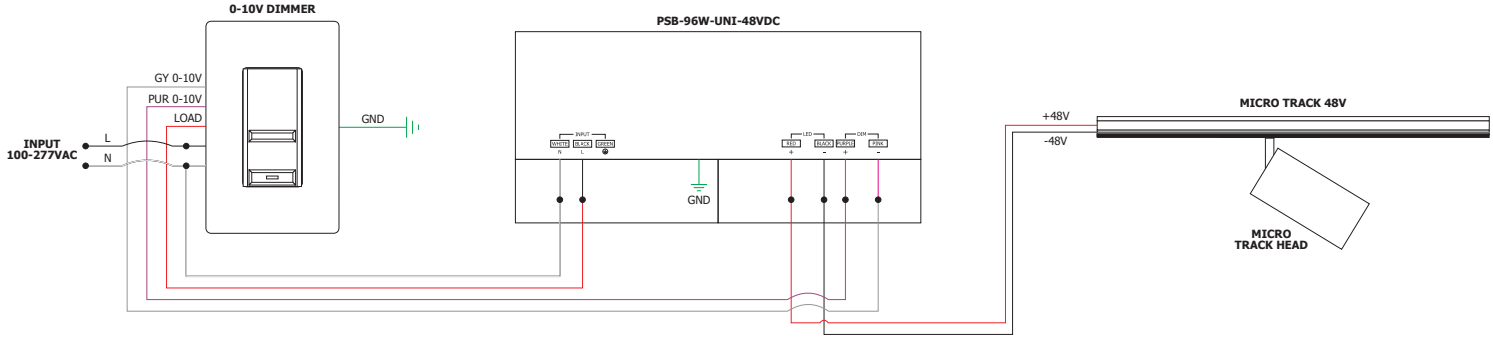

MT48 MicroTrack™ TRACK HEADS

48VDC WITH INTEGRATED LED, ETL LISTED

PROJECT

FIXTURE TYPE

DATE

REV 08.17.26

PureEdge MT48 Track Heads are compatible with all MicroTrack™ Systems. May also be ordered with a MonoPoint Canopy.

SLIM

671 LM @ 3000K, 6 WATT, TITLE 24

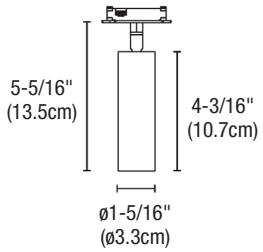

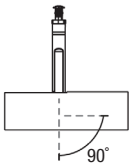

*For lenses and lens accessories, refer to the accessories page

System	Fixture	Wattage	Beam Spread	Color Temperature	Finish
MT48	**SLM**	**6W**	**NF**	**30K**	**BK**
MT48 MicroTrack 48VDC	**SLM** Slim Track Head	**6W** 6 Watts	**NS** Narrow Spot 15° **SP** Spot 24° **NF** Narrow Flood 36° **FL** Flood 50°	**24K** 2400K Amber White **27K** 2700K Very Warm White **30K** 3000K Warm White **30D*** 3000K dims to 1800K **35K** 3500K Neutral White **40K** 4000K Cool White *Not compatible with the **NS** (15°) lens	**BK** Black Powder Coat **MW** Matte White Powder Coat RAL 9003 **SB** Satin Brass **SN** Satin Nickel

	SLIM (WITH NARROW SPOT 15° LENS)					
COLOR TEMPERATURE	24K	27K	30K	30D	35K	40K
TOTAL LUMENS	637	644	671	505	770	812
WATTS	6	6	6	6	6	6
LUMENS PER WATT (lm/w)	106	107	112	84	128	135
CRI	95+	95+	95+	95+	95+	95+

PICO & PICO ZOOM

965 LM @ 3000K, 10 WATT, TITLE 24 (PICO) / 750 LM @ 3000K, 10 WATTS, TITLE 24 (PICO ZOOM)

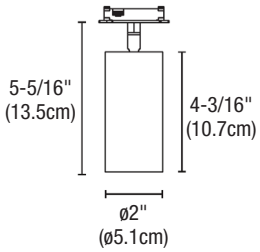

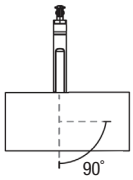

*For lenses and lens accessories, refer to the accessories page

System	Fixture	Wattage	Beam Spread	Color Temperature	Finish
MT48	**PCO**	**10W**	**FL**	**30K**	**BK**
MT48 MicroTrack 48VDC	**PCO** Pico Track Head **PCZ** Pico Zoom Track Head, NSFL Beam Spread	**10W** 10 Watts	**NS** Narrow Spot 15° **SP** Spot 24° **NF** Narrow Flood 36° **FL** Flood 50° **NSFL** Narrow Spot 15° to Flood 50° (Pico Zoom Only)	**24K** 2400K Amber White **27K** 2700K Very Warm White **30K** 3000K Warm White **30D** 3000K Warm Dim **35K** 3500K Neutral White **40K** 4000K Cool White	**BK** Black Powder Coat **MW** Matte White Powder Coat RAL 9003, Matte White Stem **SB*** Satin Brass **SN*** Satin Nickel *Not available with Pico Zoom

	PICO (WITH SPOT 24° LENS)						PICO ZOOM (WITH 50° BEAM SPREAD)					
COLOR TEMPERATURE	24K	27K	30K	30D	35K	40K	24K	27K	30K	30D	35K	40K
TOTAL LUMENS	917	926	965	853	1107	1168	713	720	750	578	860	908
WATTS	10	10	10	10	10	10	11	11	11	11	11	11
LUMENS PER WATT (lm/w)	92	93	97	85	111	117	65	65	68	53	78	83
CRI	97+	97+	97+	97+	97+	97+	97+	97+	97+	97+	97+	97+

MT48 MicroTrack™ TRACK HEADS

48VDC WITH INTEGRATED LED, ETL LISTED

PURE EDGE™ Pure Smart Lighting

PROJECT

FIXTURE TYPE

DATE

REV 08.17.26

PureEdge MT48 Track Heads are compatible with all MicroTrack™ Systems.

POP & POP ZOOM

1865 LM @ 3000K, 15 WATT, TITLE 24 (POP) / 1062 LM @ 3000K, 15 WATT, TITLE 24 (POP ZOOM)

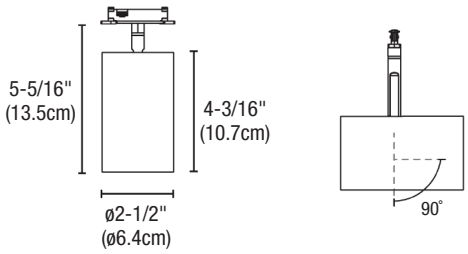

*For lenses and lens accessories, refer to the accessories page

System	Fixture	Wattage	Beam Spread	Color Temperature	Finish
MT48	POP	15W	NS	30K	BK

MT48 MicroTrack 48VDC

POP Pop Track Head

POZ Pop Zoom Track Head, NSFL Beam Spread

15W 15 Watts

NS Narrow Spot 15°
SP Spot 24°
NF Narrow Flood 36°
FL Flood 50°

NSFL Narrow Spot 15° to Flood 50° (Pico Zoom Only)

24K 2400K Amber White
27K 2700K Very Warm White
30K 3000K Warm White
30D 3000K Warm Dim
35K 3500K Neutral White
40K 4000K Cool White

BK Black Powder Coat
MW Matte White Powder Coat RAL 9003, Matte White Stem
SB* Satin Brass
SN* Satin Nickel

*Not available with Pico Zoom

	POP (WITH FLOOD 50° LENS)						POP ZOOM (WITH 50° BEAM SPREAD)					
COLOR TEMPERATURE	24K	27K	30K	30D*	35K	40K	24K	27K	30K	30D	35K	40K
TOTAL LUMENS	1772	1790	1865	1051	2140	2257	1009	1020	1062	878	1218	1285
WATTS	15	15	15	12	15	15	15	15	15	15	15	15
LUMENS PER WATT (lm/w)	118	119	124	88	143	150	67	68	71	55	81	86
CRI	95+	95+	95+	97+	95+	95+	98+	98+	98+	98+	98+	98+

*30D - Warm Dim (12 Watts), Narrow Flood 35° Lens

FRAME 1

641 LM @ 3000K, 10 WATT 48VDC CLASS 2, TITLE 24

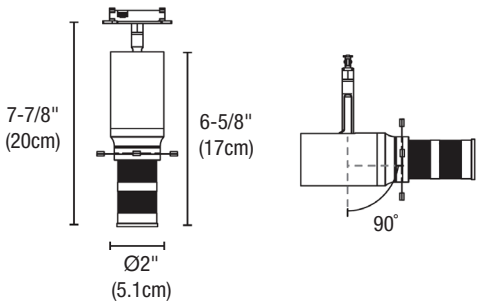

*For color filters and Gobo lenses, refer to the accessories page

System	Fixture	Wattage	Beam Spread	Color Temperature	Finish
MT48	FRM1	10W	SPNF	30K	BK

MT48 MicroTrack 48VDC

FRM1 Frame 1 Track Head

10W 10 Watts

SPNF Spot 20° to Narrow Flood 30°

24K 2400K Amber White
27K 2700K Very Warm White
30K 3000K Warm White
30D 3000K Warm Dim
35K 3500K Neutral White
40K 4000K Cool White

BK Black Powder Coat
MW Matte White Powder Coat RAL 9003

	FRAME 1 (WITH 30° BEAM SPREAD)					
COLOR TEMPERATURE	24K	27K	30K	30D	35K	40K
TOTAL LUMENS	609	615	641	494	735	776
WATTS	10	10	10	11	10	10
LUMENS PER WATT (lm/w)	55	56	58	45	67	71
CRI	97+	97+	97+	97+	97+	97+

MT48 MicroTrack™ TRACK HEADS

48VDC WITH INTEGRATED LED, ETL LISTED

PURE EDGE™ Pure Smart Lighting

PROJECT

FIXTURE TYPE

DATE

REV 08.17.26

LIGHT BAR

400 LM @ 3000K, 6 WATT, 12" LENGTH, TITLE 24

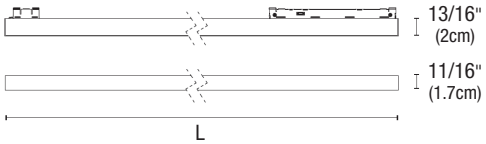

6W12: 11-11/16" (29.7cm)
11W24: 23-1/4" (59cm)
17W36: 34-13/16" (88.4cm)

System		Fixture		Wattage		Color Temperature		Finish
MT48	–	**LB**	–	**6W12**	–	**30K**	–	**BK**

MT48 MicroTrack 48VDC

LB Light Bar

6W12 6 Watts, 12" Length
11W24 11 Watts, 24" Length
17W36 17 Watts, 36" Length

27K 2700K Very Warm White
30K 3000K Warm White
35K 3500K Neutral White
40K 4000K Cool White

BK Black Powder Coat
MW Matte White Powder Coat RAL 9003

	LIGHT BAR WITH 140° LENS											
WATTAGE	6W - 12" (11-11/16")				11W - 24" (23-1/4")				17W - 36" (34-13/16")			
COLOR TEMPERATURE	27K	30K	35K	40K	27K	30K	35K	40K	27K	30K	35K	40K
TOTAL LUMENS	384	400	459	484	768	800	918	968	1152	1200	1377	1452
LUMENS PER WATT (lm/w)	64	67	76	81	128	133	153	161	192	200	229	242
CRI	90+	90+	90+	90+	90+	90+	90+	90+	90+	90+	90+	90+

LIGHT BAR LOUVER

129 LM @ 3000K, 6 WATT, 12" LENGTH, TITLE 24

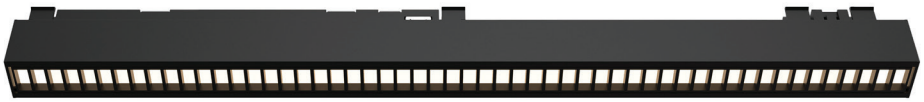

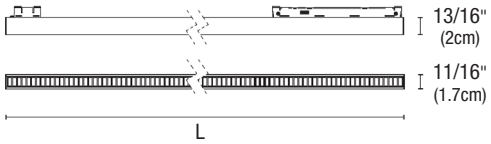

6W12: 11-11/16" (29.7cm)
11W24: 23-1/4" (59cm)
17W36: 34-13/16" (88.4cm)

System		Fixture		Wattage		Color Temperature		Finish
MT48	–	**LBL**	–	**6W12**	–	**30K**	–	**BK**

MT48 MicroTrack 48VDC

LBL Light Bar Louver

6W12 6 Watts, 12" Length
11W24 11 Watts, 24" Length
17W36 17 Watts, 36" Length

27K 2700K Very Warm White
30K 3000K Warm White
35K 3500K Neutral White
40K 4000K Cool White

BK Black Powder Coat
MW Matte White Powder Coat RAL 9003

	LIGHT BAR LOUVER & 120° LENS											
WATTAGE	6W - 12" (11-11/16")				11W - 24" (23-1/4")				17W - 36" (34-13/16")			
COLOR TEMPERATURE	27K	30K	35K	40K	27K	30K	35K	40K	27K	30K	35K	40K
TOTAL LUMENS	124	129	148	156	248	258	296	312	372	387	444	468
LUMENS PER WATT (lm/w)	21	22	25	26	41	43	49	52	62	65	74	78
CRI	90+	90+	90+	90+	90+	90+	90+	90+	90+	90+	90+	90+

MT48 MicroTrack™ TRACK HEADS

48VDC WITH INTEGRATED LED, ETL LISTED

PURE EDGE™ Pure Smart Lighting

PROJECT

FIXTURE TYPE

DATE

REV 08.17.26

LIGHT BAR HEXCELL LOUVER

168 LM @ 3000K, 6 WATT, 12" LENGTH, TITLE 24

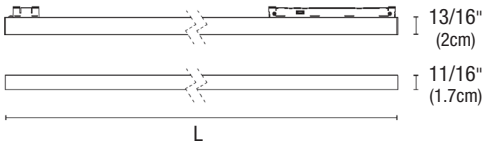

6W12: 11-11/16" (29.7cm)
11W24: 23-1/4" (59cm)
17W36: 34-13/16" (88.4cm)

System		Fixture		Wattage		Color Temperature		Finish
MT48	–	**LBH**	–	**6W12**	–	**30K**	–	**BK**

MT48 MicroTrack 48VDC

LBH Light Bar Hexcell Louver

6W12 6 Watts, 12" Length
11W24 11 Watts, 24" Length
17W36 17 Watts, 36" Length

27K 2700K Very Warm White
30K 3000K Warm White
35K 3500K Neutral White
40K 4000K Cool White

BK Black Powder Coat
MW Matte White Powder Coat RAL 9003

	LIGHT BAR WITH HEXCELL LOUVER & 120° LENS											
WATTAGE	6W - 12" (11-11/16")				11W - 24" (23-1/4")				17W - 36" (34-13/16")			
COLOR TEMPERATURE	27K	30K	35K	40K	27K	30K	35K	40K	27K	30K	35K	40K
TOTAL LUMENS	161	168	193	203	323	336	385	407	484	504	578	610
LUMENS PER WATT (lm/w)	27	28	32	34	54	56	64	68	81	84	96	102
CRI	90+	90+	90+	90+	90+	90+	90+	90+	90+	90+	90+	90+

LIGHT BAR ACCENT

548 LM @ 3000K, 9 WATT, 6" LENGTH, TITLE 24

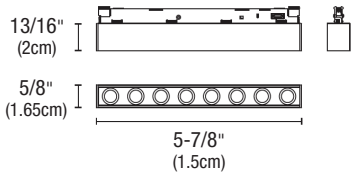

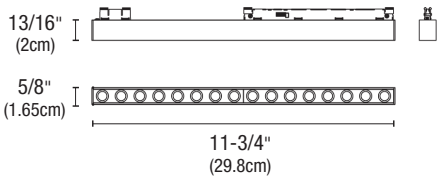

System		Fixture		Wattage		Beam Spread		Color Temperature		Finish
MT48	–	**BA**	–	**9W6**	–	**NF**	–	**30K**	–	**BB**

MT48 MicroTrack 48VDC

BA Bar Accent

9W6 9 Watts, 6" Length
16W12 16 Watts, 12" Length

NF Narrow Flood 30°

27K 2700K Very Warm White
30K 3000K Warm White
35K 3500K Neutral White
40K 4000K Cool White

BB Black Fixture Black Baffle
BC Black Fixture Crystal Baffle
BG Black Fixture Gold Baffle
MB Matte White Fixture Black Baffle
MC Matte White Fixture Crystal Baffle
MG Matte White Fixture Gold Baffle

	LIGHT BAR ACCENT WITH 30° LENS							
WATTAGE	9W				16W			
COLOR TEMPERATURE	27K	30K	35K	40K	27K	30K	35K	40K
TOTAL LUMENS	526	548	629	663	1005	1047	1201	1267
LUMENS PER WATT (lm/w)	88	91	105	111	168	175	200	211
CRI	90+	90+	90+	90+	90+	90+	90+	90+

MT48 MicroTrack™ TRACK HEADS

48VDC WITH INTEGRATED LED, ETL LISTED

PURE EDGE Pure Smart Lighting

PROJECT

FIXTURE TYPE

DATE

REV 08.17.26

LIGHT BAR ACCENT HEXCELL LOUVER

270 LM @ 3000K, 9 WATT, 6" LENGTH, TITLE 24

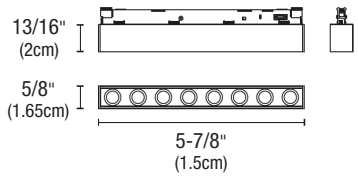

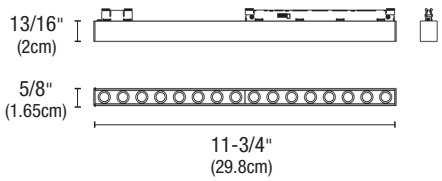

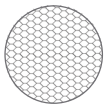

Hexcell Louver Detail

System		Fixture		Wattage		Beam Spread		Color Temperature		Finish
MT48	–	**BAH**	–	**9W6**	–	**NF**	–	**30K**	–	**BB**

MT48 MicroTrack 48VDC

BAH Bar Accent Hexcell Louver

9W6 9 Watts, 6" Length
16W12 16 Watts, 12" Length

NF Narrow Flood 30°

27K 2700K Very Warm White
30K 3000K Warm White
35K 3500K Neutral White
40K 4000K Cool White

BB Black Fixture Black Baffle
BC Black Fixture Crystal Baffle
BG Black Fixture Gold Baffle
MB Matte White Fixture Black Baffle
MC Matte White Fixture Crystal Baffle
MG Matte White Fixture Gold Baffle

	LIGHT BAR ACCENT WITH HEXCELL LOUVER & 30° LENS							
WATTAGE	9W				16W			
COLOR TEMPERATURE	27K	30K	35K	40K	27K	30K	35K	40K
TOTAL LUMENS	259	270	310	327	493	514	590	622
LUMENS PER WATT (lm/w)	43	45	52	54	82	86	98	104
CRI	90+	90+	90+	90+	90+	90+	90+	90+

LIGHT BAR ACCENT TILT

548 LM @ 3000K, 9 WATT, 6" LENGTH, TITLE 24

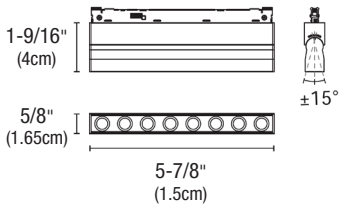

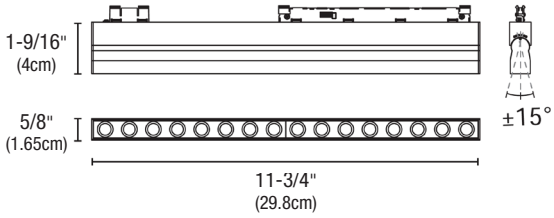

System		Fixture		Wattage		Beam Spread		Color Temperature		Finish
MT48	–	**BAT**	–	**9W6**	–	**NF**	–	**30K**	–	**BB**

MT48 MicroTrack 48VDC

BAT Bar Accent Tilt

9W6 9 Watts, 6" Length
16W12 16 Watts, 12" Length

NF Narrow Flood 30°

27K 2700K Very Warm White
30K 3000K Warm White
35K 3500K Neutral White
40K 4000K Cool White

BB Black Fixture Black Baffle
BC Black Fixture Crystal Baffle
BG Black Fixture Gold Baffle
MB Matte White Fixture Black Baffle
MC Matte White Fixture Crystal Baffle
MG Matte White Fixture Gold Baffle

	LIGHT BAR ACCENT ROTATABLE WITH 30° LENS							
WATTAGE	9W				16W			
COLOR TEMPERATURE	27K	30K	35K	40K	27K	30K	35K	40K
TOTAL LUMENS	526	548	629	663	1005	1047	1201	1267
LUMENS PER WATT (lm/w)	88	91	105	111	168	175	200	211
CRI	90+	90+	90+	90+	90+	90+	90+	90+

MT48 MicroTrack™ TRACK HEADS

48VDC WITH INTEGRATED LED, ETL LISTED

PURE EDGE Pure Smart Lighting

PROJECT

FIXTURE TYPE

DATE

REV 08.17.26

LIGHT BAR ACCENT TILT HEXCELL LOUVER

270 LM @ 3000K, 9 WATT, 6" LENGTH, TITLE 24

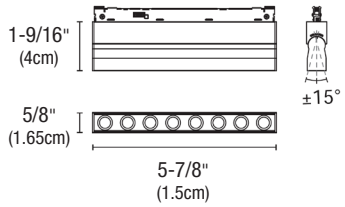

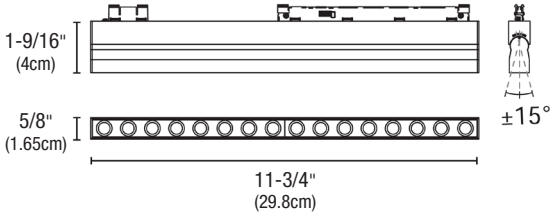

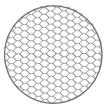

Hexcell Louver Detail

System	Fixture	Wattage	Beam Spread	Color Temperature	Finish
MT48	**BATH**	**9W6**	**NF**	**30K**	**BB**
MT48 MicroTrack 48VDC	**BATH** Bar Accent Tilt Hexcell Louver	**9W6** 9 Watts, 6" Length **16W12** 16 Watts, 12" Length	**NF** Narrow Flood 30°	**27K** 2700K Very Warm White **30K** 3000K Warm White **35K** 3500K Neutral White **40K** 4000K Cool White	**BB** Black Fixture Black Baffle **BC** Black Fixture Crystal Baffle **BG** Black Fixture Gold Baffle **MB** Matte White Fixture Black Baffle **MC** Matte White Fixture Crystal Baffle **MG** Matte White Fixture Gold Baffle

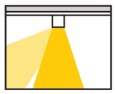

	LIGHT BAR ACCENT ROTATABLE WITH HEXCELL LOUVER & 30° LENS							
WATTAGE	9W				16W			
COLOR TEMPERATURE	27K	30K	35K	40K	27K	30K	35K	40K
TOTAL LUMENS	259	270	310	327	493	514	590	622
LUMENS PER WATT (lm/w)	43	45	52	54	82	86	98	104
CRI	90+	90+	90+	90+	90+	90+	90+	90+

LIGHT BAR WALL WASH

548 LM @ 3000K, 9 WATT, 6" LENGTH, TITLE 24

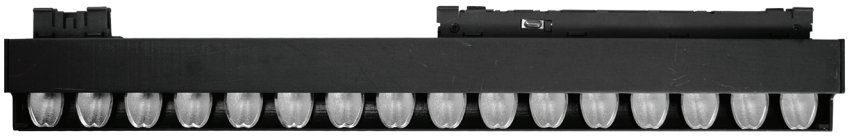

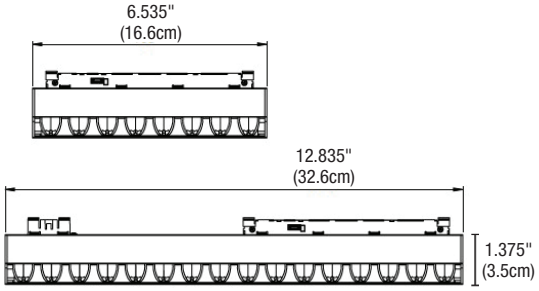

*For a consistent wall wash, place Light Bar Wall Wash fixtures 20" from the wall and 16" apart

System	Fixture	Wattage	Color Temperature	Finish
MT48	**BWW**	**9W6**	**30K**	**BK**
MT48 MicroTrack 48VDC	**BWW** Bar Wall Wash	**9W6** 9 Watts, 6" Length **16W12** 16 Watts, 12" Length	**27K** 2700K Very Warm White **30K** 3000K Warm White **35K** 3500K Neutral White **40K** 4000K Cool White	**BK** Black Powder Coat **MW** Matte White Powder Coat RAL 9003

	LIGHT BAR WALL WASH							
WATTAGE	9W				16W			
COLOR TEMPERATURE	27K	30K	35K	40K	27K	30K	35K	40K
TOTAL LUMENS	526	548	629	663	1005	1047	1201	1267
LUMENS PER WATT (lm/w)	88	91	105	111	168	175	200	211
CRI	90+	90+	90+	90+	90+	90+	90+	90+

MT48 MicroTrack™ TRACK HEADS

48VDC WITH INTEGRATED LED, ETL LISTED

PROJECT

FIXTURE TYPE

DATE

REV 08.17.26

GROOVE FLEX LIGHT

221/310 LM/FT @ 3000K, 5 WATT, TITLE 24

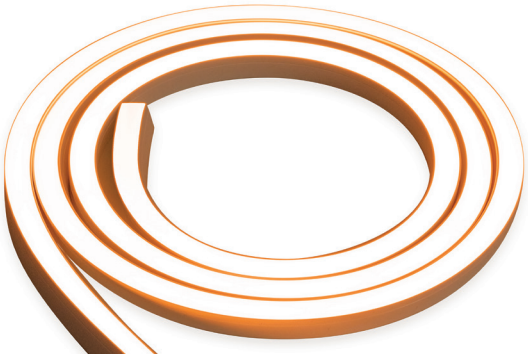

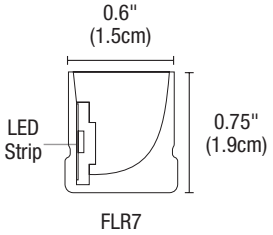

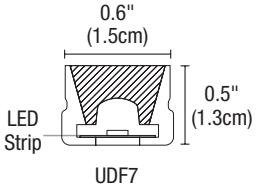

System		Fixture		Wattage		Length		Color Temperature
MTG48	–	**FLR7**	–	**5W**	–	**20FT**	–	**30K**

MT48 MicroTrack Groove 48VDC

FLR7 Flex Light Bends Left/Right, 320 Lm/ft @ 3000K **Curved or Straight Runs**

FUD7 Flex Light Bends Up/Down, 490 Lm/ft @ 3000K **Straight Runs Only**

5W 5 Watts

1-20FT 1-20 Feet

27K 2700K Very Warm White

27D 2700K Dims to 2000K

30K 3000K Warm White

35K 3500K Neutral White

	GROOVE FLEX LIGHT							
WATTAGE	5W - FLR7				5W - FUD7			
COLOR TEMPERATURE	27K	27D*	30K	35K	27K	27D*	30K	35K
TOTAL LUMENS	212	252	221	254	297	353	310	355
LUMENS PER WATT (lm/w)	48	53	50	58	68	74	70	81
CRI	92+	94+	92+	92+	92+	94+	92+	92+

*27D - Warm Dim (4.8 Watts)

MT48 MicroTrack™ TRACK HEADS

48VDC WITH INTEGRATED LED, ETL LISTED

PROJECT

FIXTURE TYPE

DATE

REV 08.17.26

TOTEM PENDANT

596 LM @ 3000K, 7 WATT

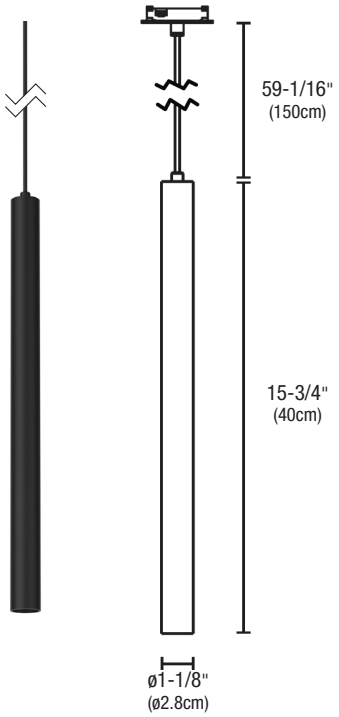

System		Fixture		Wattage		Beam Spread		Color Temperature		Finish
MT48	–	**TTP**	–	**7W**	–	**SP**	–	**30K**	–	**BK**

MT48 MicroTrack 48VDC

TTP Totem Pendant

7W 7 Watts

SP Spot 20°
NF Narrow Flood 24°
FL Flood 36°
WF Wide Flood 56°

27K 2700K Very Warm White
30K 3000K Warm White
35K 3500K Neutral White
40K 4000K Cool White

BK Black
MW Matte White

	TOTEM PENDANT			
WATTAGE	7W			
COLOR TEMPERATURE	27K	30K	35K	40K
TOTAL LUMENS	572	596	685	721
LUMENS PER WATT (lm/w)	82	85	98	103
CRI	90+	90+	90+	90+

TOWER PENDANT

707 LM @ 3000K, 7 WATT

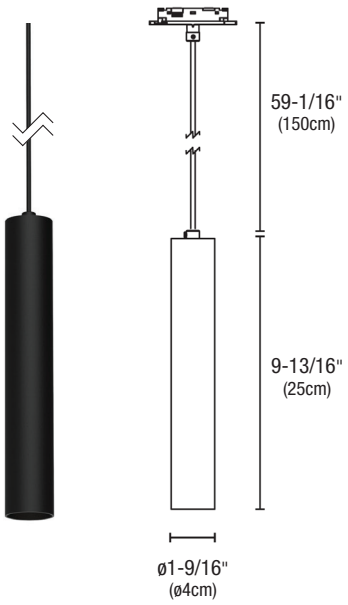

System		Fixture		Wattage		Beam Spread		Color Temperature		Finish
MT48	–	**TOP**	–	**7W**	–	**SP**	–	**30K**	–	**BK**

MT48 MicroTrack 48VDC

TOP Tower Pendant

7W 7 Watts

SP Spot 20°
NF Narrow Flood 24°
FL Flood 36°
WF Wide Flood 47°

27K 2700K Very Warm White
30K 3000K Warm White
35K 3500K Neutral White
40K 4000K Cool White

BK Black
MW Matte White

	TOTEM PENDANT			
WATTAGE	7W			
COLOR TEMPERATURE	27K	30K	35K	40K
TOTAL LUMENS	679	707	813	855
LUMENS PER WATT (lm/w)	97	101	116	122
CRI	90+	90+	90+	90+

MT48 MicroTrack™ TRACK HEADS

48VDC WITH INTEGRATED LED, ETL LISTED

PURE EDGE™ Pure Smart Lighting

PROJECT

FIXTURE TYPE

DATE

REV 08.17.26

MIDAS PENDANT

1776 LM @ 3000K, 15 WATT

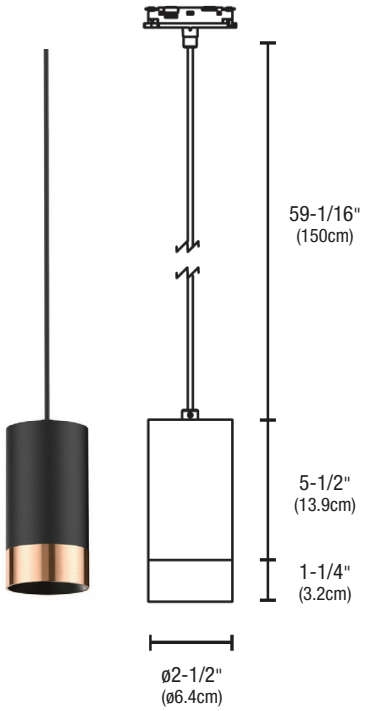

*For lens accessories, refer to the accessories page

System		Fixture		Wattage		Beam Spread		Color Temperature		Finish
MT48	–	**MIP**	–	**15W**	–	**SP**	–	**30K**	–	**BSB**

MT48 MicroTrack 48VDC

MIP Midas Pendant

15W 15 Watts

SP Spot 20°
NF Narrow Flood 25°
FL Flood 38°
WF Wide Flood 50°

27K 2700K Very Warm White
30K 3000K Warm White
35K 3500K Neutral White
40K 4000K Cool White

BK Black
MW Matte White
BRG Black and Rose Gold

	MIDAS PENDANT			
WATTAGE	15W			
COLOR TEMPERATURE	27K	30K	35K	40K
TOTAL LUMENS	1705	1776	2042	2149
LUMENS PER WATT (lm/w)	114	118	136	143
CRI	90+	90+	90+	90+

DROP PENDANT

1755 LM @ 3000K, 15 WATT

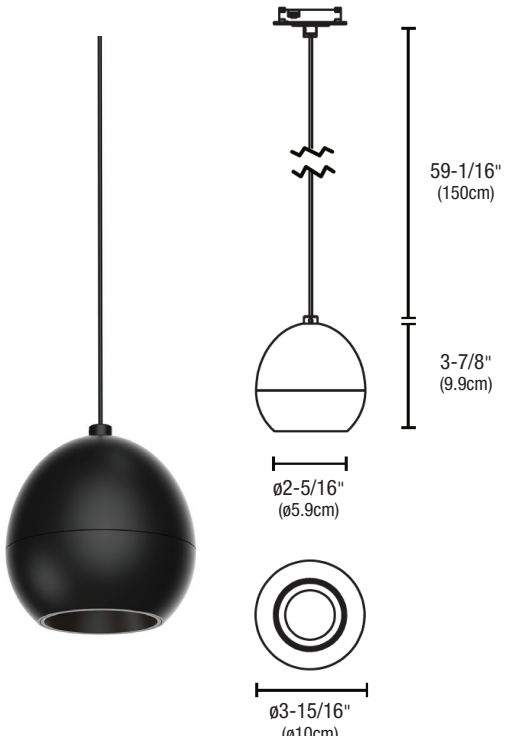

System		Fixture		Wattage		Beam Spread		Color Temperature		Finish
MT48	–	**DP**	–	**15W**	–	**SP**	–	**30K**	–	**BK**

MT48 MicroTrack 48VDC

DP Drop Pendant

15W 15 Watts

SP Spot 20°
NF Narrow Flood 25°
FL Flood 38°
WF Wide Flood 50°

27K 2700K Very Warm White
30K 3000K Warm White
35K 3500K Neutral White
40K 4000K Cool White

BK Black
MW Matte White

	DROP PENDANT			
WATTAGE	15W			
COLOR TEMPERATURE	27K	30K	35K	40K
TOTAL LUMENS	1685	1755	2018	2124
LUMENS PER WATT (lm/w)	112	117	135	142
CRI	90+	90+	90+	90+

MT48 MicroTrack™ TRACK HEADS

48VDC WITH INTEGRATED LED, ETL LISTED

PURE EDGE™ Pure Smart Lighting

PROJECT

FIXTURE TYPE

DATE

REV 08.17.26

Accessories

	SLIM OPTICAL LENS		GLASS LENS	LOUVER	FOCUS LENS	LINEAR SPREAD FILM
				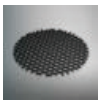		
ORDERING CODE	**(STATIC WHITE)** **OPL-SLM-NS-SW** **OPL-SLM-SP-SW** **OPL-SLM-NF-SW** **OPL-SLM-FL-SW**		**GL9-AS (ASYMMETRIC)** **GL9-SF (SOFT DIFFUSER)**	**L09-H**	**LF09-SF (SOFT FOCUS),** **LF09-MF (MEDIUM FOCUS),** **LF09-WF (WIDE FOCUS)**	**LF09-LS**
LENS SIZE	ø1-5/16" (3.3cm) Diameter		Glass Lens	Hexcell louver eliminates glare.	Soft focus lens is included with every track head. Diffuses the beam, providing uniform illumination.	1-1/8" Dia. Linear Spread Film. Linear spread film: directs the light into an elongated beam. Typical applications using 10°, 15°, 24°.
DESCRIPTIONS	**NS** (15°), **SP** (24°), **NF** (36°), **FL** (50°)					

	PICO OPTICAL LENS		GLASS LENS	LOUVER	FOCUS LENS	LINEAR SPREAD FILM
				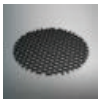		
ORDERING CODE	**(STATIC WHITE)** **OPL-PCO-NS-SW** **OPL-PCO-SP-SW** **OPL-PCO-NF-SW** **OPL-PCO-FL-SW**	**(WARM DIM)** **OPL-PCO-NS-WD** **OPL-PCO-SP-WD** **OPL-PCO-NF-WD** **OPL-PCO-FL-WD**	**GL10-VLS**	**L010-H**	**LF10-SF (SOFT FOCUS),** **LF10-MF (MEDIUM FOCUS),** **LF10-WF (WIDE FOCUS)**	**LF10-LS**
LENS SIZE	ø2" (5.1cm) Diameter		Glass Oval Spread Lens	Hexcell louver eliminates glare.	Soft focus lens is included with every track head. Diffuses the beam, providing uniform illumination.	1-1/4" Dia. Linear Spread Film. Linear spread film: directs the light into an elongated beam. Typical applications using 10°, 18°, 24°.
DESCRIPTIONS	**NS** (18°), **SP** (24°), **NF** (40°), **FL** (50°)					

	POP OPTICAL LENS		GLASS LENS	LOUVER	FOCUS LENS	LINEAR SPREAD FILM	SNOOT	
ORDERING CODE	**(STATIC WHITE)** **OPL-POP-NS-SW** **OPL-POP-SP-SW** **OPL-POP-NF-SW** **OPL-POP-FL-SW**	**(WARM DIM)** **OPL-POP-NS-WD** **OPL-POP-SP-WD** **OPL-POP-NF-WD** **OPL-POP-FL-WD**	**GL16-LS**	**L016-H**	**LF16-SF** **(SOFT FOCUS),** **LF16-MF** **(MEDIUM FOCUS),** **LF16-WF** **(WIDE FOCUS)**	**LF16-LS**	**POP-ST-BK** **POP-ST-MW**	**POP-STA-BK** **POP-STA-MW**
LENS SIZE	ø2-1/2" (6.4cm) Diameter		Glass Linear Spread Lens	Hexcell louver elimi-nates glare. 2" Dia.	Soft focus lens is included with every track head. Diffuses the beam, providing uniform illumination.	2" Dia. Linear Spread Film. Linear spread film: directs the light into an elongated beam. Typical applications using 10°, 15°, 25°.	POP Snoot is designed to reduce spill and control glare. In Black or Matte White RAL 9003	Asymmetrical Snoot for Wall Wash with GL12-LS. Reduces spill and control glare. In Black or Matte White RAL 9003
DESCRIPTIONS	**NS** (15°), **SP** (24°), **NF** (36°), **FL** (50°)							

*Cannot be used in Groove Track

Accessories

PICO & POP ZOOM		SPREAD LENS	
ACCESSORIES FOR PICO & POP		**(PICO)** **PCZ-VLS-BK** **PCZ-VLS-MW**	**(POP)** **POZ-VLS-BK** **POZ-VLS-MW**
LENS SIZE	ø2-1/2" (6.4cm) Diameter	Oval Spread Lens. In Black or Matte White	

FRAME 1		LENS FILM COLOR FILTER	GOBO LENS
ACCESSORIES FOR FRAME 1		**(FRAME COLOR LENS)**	**(FRAME GOBO LENS)**
		LF-FRM1-BLU **LF-FRM1-RED** **LF-FRM1-YLW**	**(FRAME 1)** **GB-FRM1**
LENS SIZE	ø2-1/2" (6.4cm) Diameter	Frame 1 Lens Film Color filter produces beams of light. Choose for any of Rosco Color films. Custom color filters available.	Frame 1 with a Gobo lens projects your logo or design onto any surface using full color options. For custom Gobo, send your drawings and ideas to our design team: design@PureEdgeLighting.com

MIDAS PENDANT		LOUVER	FOCUS LENS	LINEAR SPREAD FILM
ACCESSORIES FOR MIDAS PENDANT		**LO16-H**	**LF16-SF** **(SOFT FOCUS),** **LF16-MF** **(MEDIUM FOCUS),** **LF16-WF** **(WIDE FOCUS)**	**LF16-LS**
LENS SIZE	ø2-1/2" (6.4cm) Diameter	Hexcell louver eliminates glare. 2" Dia.	Soft focus lens is included with every track head. Diffuses the beam, providing uniform illumination.	2" Dia. Linear Spread Film. Linear spread film: directs the light into an elongated beam. Typical applications using 10°, 15°, 25°.

PDW-100W-DIM-48VDC-WH

2-IN-1 POWER DRIVER AND DIMMER

PROJECT

FIXTURE TYPE

DATE

REV 08.17.26

PDW-100W-DIM-48VDC-WH

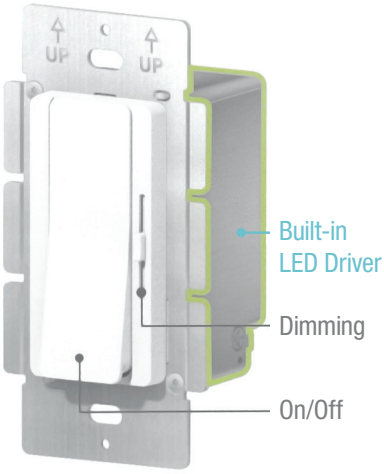

DESCRIPTION

Power Dim 2-in-1 is a dimmer with an integrated LED driver that converts 120VAC to low-voltage 48VDC (up to 96W). Designed for installation in a standard single-gang electrical box, it eliminates the need for separate remote drivers, simplifying installation to provide an option that is as cost-effective as it is time efficient.

PureEdge Lighting's Power Driver combines an ELV dimmer and driver in a single, wall-mounted unit.
Kit includes driver/dimmer, faceplate, and mounting hardware.

The integrated design delivers smooth, flicker-free dimming and avoids driver/switch compatibility issues. Features soft start and built-in short-circuit, overload, and thermal protection. Indoor use only.

For custom quotes and layout assistance, send drawings to design@PureEdgeLighting.com.

INTEGRATED DESIGN

- Combines LED driver and dimmer into a single device
- Soft start
- Short circuit protection
- Overload protection
- Thermal overload protection
- Utilizes 6" wire leads

APPLICATIONS

Indoor

MOUNTING

Fits into a standard single-gang wall box, standard hardwire connection

POWER INPUT

- 120VAC
- Power Factor @ full load: >0.99
- THD (Typ.) @ full load: ≤10%
- Efficiency @ full load: 91.0%
- AC Current (Max.): 0.9A

POWER OUTPUT

- Class 2; 48 volts DC
- 96 watts maximum
- Voltage Tolerance: ±0.5V
- Rated current: 4A

DIMENSIONS

4.13" x 2.12" x 1.99"

COMPLIANCE

Class 2, UL, RoHS

Product		Wattage		Control Type		Voltage		Finish
PDW	–	**100W**	–	**DIM**	–	**48VDC**	–	**WH**
PDW Power Wall Dimmer		**100W** 100 Watts		**DIM** DIM Static White		**48VDC** 48 Volt DC		**WH** White

TM30 DATA

48VDC WITH INTEGRATED LED

PROJECT

FIXTURE TYPE

DATE

REV 08.17.26

2400K | Rf: 84.5 | Rg: 94.4

Color Vector Graphic

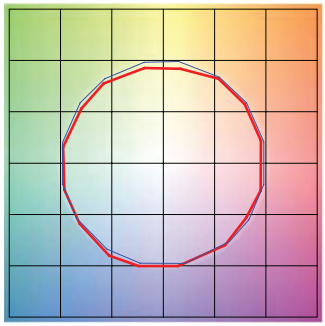

Test Reference

		GRAPHIC SHIFTS %	
HUE BIN	Rf	CHROMA	HUE
1	92	-2.4%	1.5%
2	94.7	-2.1%	-0.0%
3	95.4	-1.9%	-0.1%
4	88.7	-6.7%	-3.1%
5	92.8	-5.6%	1.0%
6	92.7	-3.4%	3.4%
7	89.9	-4.3%	4.1%
8	92.4	-1.4%	4.4%
9	89	-0.6%	5.8%
10	88.9	0.4%	6.2%
11	89.7	4.0%	5.4%
12	92.6	3.0%	-0.7%
13	90.9	1.1%	-7.0%
14	89.9	0.5%	-5.8%
15	92.1	-3.2%	0.1%
16	88.9	-1.7%	-6.3%

2700K | Rf: 87.7 | Rg: 96.1

Color Vector Graphic

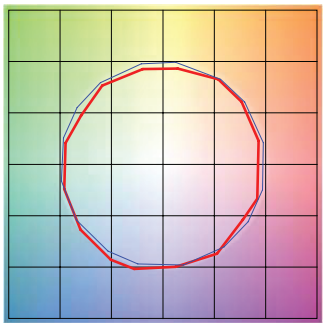

Test Reference

		GRAPHIC SHIFTS %	
HUE BIN	Rf	CHROMA	HUE
1	88.0	-4.3%	2.6%
2	91.6	-2.4%	2.0%
3	93.7	-1.4%	1.9%
4	88.9	-5.6%	-3.1%
5	92.3	-5.5%	-0.5%
6	92.9	-3.5%	0.1%
7	84.5	-7.5%	4.6%
8	90.8	-3.0%	4.4%
9	84.5	-1.3%	8.3%
10	83.9	2.0%	9.8%
11	87.2	5.3%	7.1%
12	89.2	5.4%	-2.6%
13	88.7	0.3%	-7.8%
14	86.8	1.7%	-9.3%
15	87.6	-5.4%	-1.3%
16	83.6	-3.3%	-9.5%

3000K | Rf: 88.1 | Rg: 99.7

Color Vector Graphic

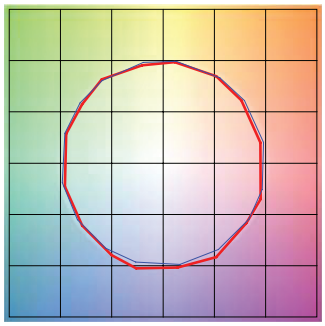

Test Reference

		GRAPHIC SHIFTS %	
HUE BIN	Rf	CHROMA	HUE
1	92.5	-3.1%	0.3%
2	93.3	-2.3%	1.9%
3	90.9	-0.8%	3.9%
4	94.3	-1.1%	1.4%
5	92.5	-2.6%	1.5%
6	96.4	1.2%	-0.3%
7	92.6	-2.5%	-0.0%
8	96.9	-1.4%	0.2%
9	92.3	-1.8%	4.3%
10	86.6	-0.7%	7.0%
11	86.5	2.4%	8.2%
12	89.8	5.9%	1.7%
13	93.9	2.6%	-2.7%
14	89.4	5.1%	-5.8%
15	90.1	-0.1%	-4.7%
16	86.5	0.3%	-9.7%

3500K | Rf: 86.1 | Rg: 95.5

Color Vector Graphic

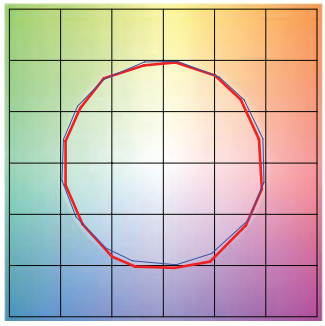

Test Reference

		GRAPHIC SHIFTS %	
HUE BIN	Rf	CHROMA	HUE
1	90.8	-3.8%	0.3%
2	92.3	-2.8%	2.1%
3	89.7	-1.0%	4.3%
4	92.6	-1.4%	1.7%
5	91.8	-3.1%	1.3%
6	96.2	0.8%	-0.4%
7	92.9	-3.2%	0.2%
8	94.3	-2.5%	1.5%
9	90.4	-2.5%	5.2%
10	84.3	-1.4%	9.5%
11	83.1	3.5%	9.8%
12	88.2	4.8%	3.4%
13	94.0	2.7%	-2.0%
14	88.7	5.9%	-5.8%
15	88.7	0.7%	-5.9%
16	86.8	-0.7%	-6.7%

4000K | Rf: 87.6 | Rg: 96.8

Color Vector Graphic

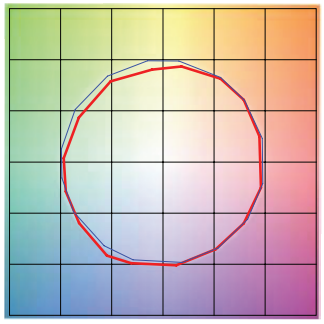

Test Reference

		GRAPHIC SHIFTS %	
HUE BIN	Rf	CHROMA	HUE
1	88.9	-2.4%	2.5%
2	93.3	-0.4%	0.8%
3	94.8	-1.0%	-0.6%
4	87.9	-4.9%	-3.6%
5	85.3	-9.4%	-2.6%
6	90.2	-6.0%	0.2%
7	85.3	-7.6%	4.6%
8	83.7	-4.1%	8.2%
9	79.5	-1.1%	13.8%
10	78.6	1.5%	12.1%
11	83.5	6.4%	7.8%
12	90.9	3.6%	-1.1%
13	88.3	1.7%	-6.3%
14	91.9	-0.4%	-2.2%
15	84.5	-0.9%	-5.5%
16	84.7	-1.1%	-4.4%