MTS48 MicroTrack™ SUSPENSION

48VDC CLASS 2, SINGLE CIRCUIT, SUSPENSION TRACK SYSTEM

PROJECT

FIXTURE TYPE

DATE

ASSEMBLED IN AMERICA

REV 08.17.26

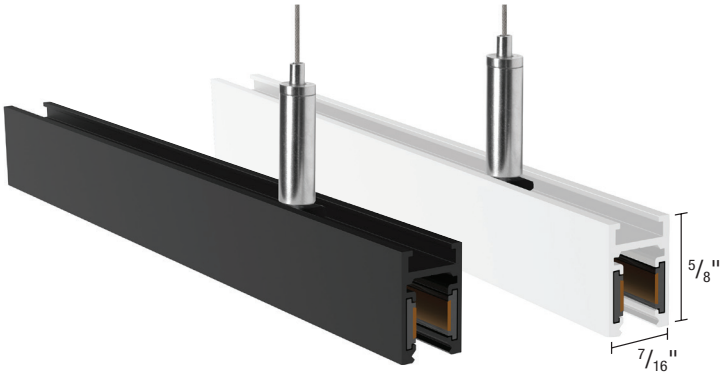

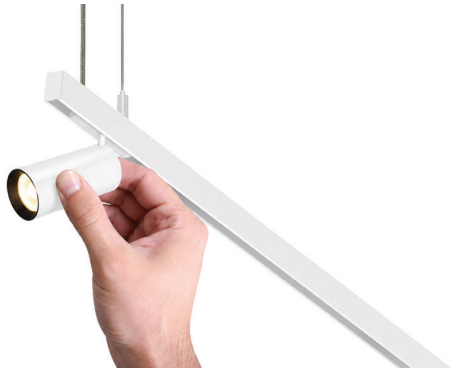

Teeny Track Head
702 lumens @3000K
2 5/8" Long x 1 5/16" Dia

DESCRIPTION

MTS48 MicroTrack™ is a 48VDC suspension track system housed in the smallest of 5/8" deep x 7/16" wide track with a 1/4" slot profile which offers multiple fixture options in a clean, contemporary style. Suspended from the ceiling with cables. For a clean architectural aesthetic, a paintable Slot Cover is supplied with track channels for hiding the 12 AWG copper busbars and mounting screws. For custom quotes and layout assistance, send your drawings and ideas to our design team: design@PureEdgeLighting.com.

FEATURES

- Track Heads easily attach to the track and adjust, tilt, and rotate. Light Bars and Teeny track heads can be installed with one hand (no screwdriver necessary).
- Designed for use with 2 x 96W 48VDC Universal Remote Power Supplies up to 40' away with low voltage wire, before refeeding power
- Power Feeds offered with End and Center Feeds
- Straight Channels are available in 4' (44") and 8' (92") lengths, with the ability to be cut in the field
- Curved Channels are available in 12" and 20" radii
- Opaque plastic Slot Cover is included with channel concealing slot

FINISH & MATERIAL

- Slot Cover: Black or Matte White PVC
- Extruded Aluminum Channel, conductors are a pair of #12 Gauge Copper Busbars

LAMP

- Lumens: Up to 1865 lm at 3000K
- Lumens Per Watt: Up to 124 lm/w at 3000K
- CRI: Minimum 90 color rendering index
- CCT: 2400K, 2700K, 3000K, 3500K, 4000K (Warm Dim available for 3000K) color temperature with a great color consistency (within 3.0– step MacAdam ellipse)
- LED Lamp Life: Minimum 50,000hr with 85% of lumen maintenance in 25.0C ambient temperature, in compliance with IES LM-80 testing measurements

POWER SUPPLY AND DIMMING (SOLD SEPARATELY)

2 x 96W 48VDC, Remote Power

- 48VDC UNI Driver: Universal Dimming (ELV, TRIAC, 0-10V) ELV & TRIAC Smart Dimmer & Switch
- 2-in-1 Power Driver and Dimmer

APPLICATIONS

Indoor use only. Ideal applications in residential, commercial, retail and hospitality environments.

WARRANTY / LABELS

5 year pro-rated warranty. Assembled in America
ETL (Conforms to UL 1598 and CSA 22.2 #250.0), Class 2 Under 100 Watts, Title 24

MTS48 MicroTrack™ SUSPENSION

48VDC CLASS 2, SINGLE CIRCUIT, SUSPENSION TRACK SYSTEM

PROJECT

FIXTURE TYPE

DATE

REV 08.17.26

COMPONENTS

MICROTRACK™ 48VDC SUSPENSION CHANNEL

SLOT COVER PROVIDED **STRAIGHT CONNECTOR**

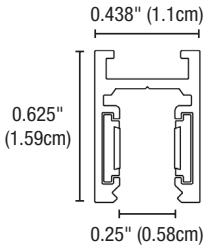

STRAIGHT 1 CIRCUIT CHANNEL

Extruded Aluminum Channel with 12 AWG busbars to help eliminate voltage drop. For use with 48VDC Remote Power Supply, sold separately. Includes a Joiner Connector, End Caps, a Straight Connector, Suspension Cables, and paintable opaque Slot Covers to conceal the 12 AWG copper busbars and mounting screws.

System		Circuit		Length in Feet		Finish
MTS48	–	**1C**	–	**8FT**	–	**BK**
MTS48 MicroTrack Suspension 48VDC		**1C** Single Circuit		**4FT** 44" **8FT** 92"		**BK** Black **MW** Matte White RAL 9003

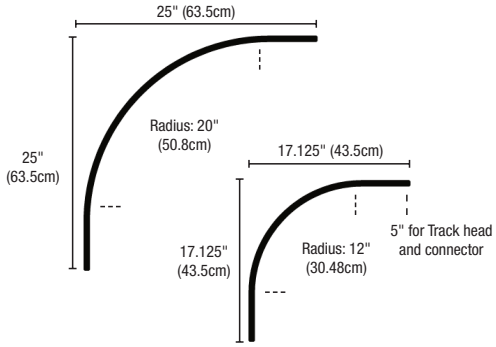

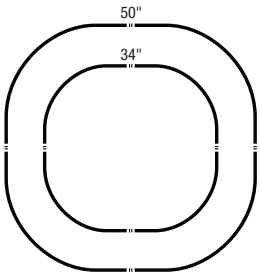

4x12" Radius = 34" Squircle
4x20" Radius = 50" Squircle

CURVE 1 CIRCUIT CHANNEL

May be used with Flex Light. Comes with a Joiner, 12ft Suspension Cable, and a Straight Connector.

System		Circuit		Radius in Inches		Finish
MTS48	–	**1C**	–	**12R**	–	**BK**
MTS48 MicroTrack Suspension Curved 48VDC*		**1C** Single Circuit		**12R*** 12" Radius **20R** 20" Radius **24R** 24" Radius		**BK** Black **MW** Matte White RAL 9003

*Curved track is not compatible with a Slot Cover

*Track Heads do not fit into **12R** 12" radius track

MTS48-EP-4RD-BK **MTS48-CP1-4RD-BK** **MTS48-CP2-4RD-BK**

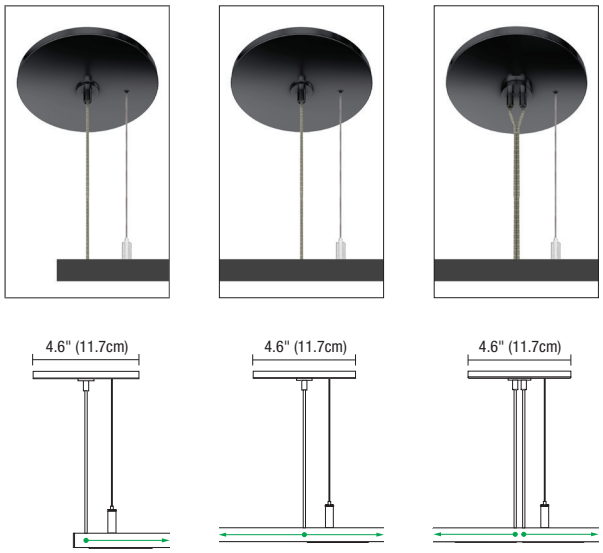

POWER FEEDS

The End Power Feed uses 48VDC 96-watt from Remote Power Supplies. The Center Feed powers the track using two 96-watt, 48VDC Remote Power Supplies. Power supplies must be connected to the same line voltage circuit (same phase).

System		Circuit & Type		Canopy		Canopy & Track Finish
MTS48	–	**CP1**	–	**4RD**	–	**BK**
MTS48 MicroTrack Suspension 48VDC		**EP1** End Power Feed Single Circuit with 12" long track **CP1** Center Power Feed Single Circuit with 12" long track **CP2** Two Center Power Feed, 2 Directions with 12" long tracks **CPT1** Center T Power Feed, 1 Direction power with 12" long tracks **CPT2** Center T Power Feed, 2 Direction power with 12" long tracks **CPT3** Center T Power Feed, 3 Direction power with 12" long tracks **CPX1** Center X Power Feed, 1 Direction power with 12" long tracks **CPX2** Center X Power Feed, 2 Direction power with 12" long tracks **CPX3** Center X Power Feed, 3 Direction power with 12" long tracks **CPX4** Center X Power Feed, 4 Direction power with 12" long tracks		**4RD** 4" Round Junction Box Cover with 12' Suspension Cable		**BK** Black **MW** Matte White RAL 9003

MTS48 MicroTrack™ SUSPENSION

48VDC CLASS 2, SINGLE CIRCUIT, SUSPENSION TRACK SYSTEM

PROJECT

FIXTURE TYPE

DATE

REV 08.17.26

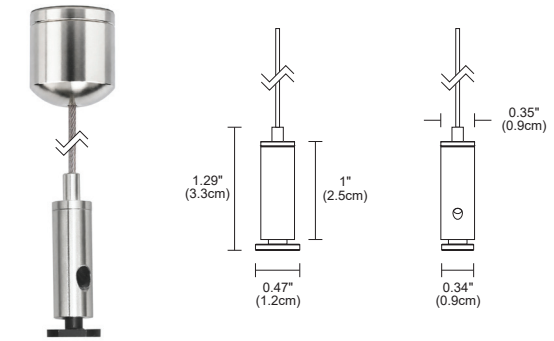

SUSPENSION CABLES & MOUNTING CLIP

Suspension Mounting Clip suspends the track up to 12ft from the ceiling. One included for every 3ft of track.

System		Type		Finish
MTS48	–	**MCL**	–	**CH**
MTS48 MicroTrack Suspension 48VDC		**MCL** Mounting Clip with 12' Suspension Cable		**CH** Chrome

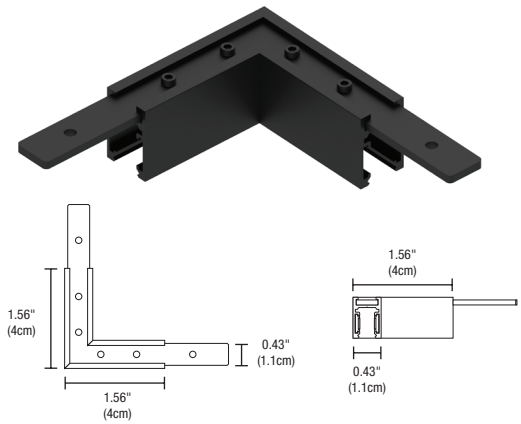

L-SHAPED CONNECTOR

L-Shaped Connector joins two sections of track 90° apart.

System		Circuit		Type		Finish
MTS48	–	**1C**	–	**LC**	–	**BK**
MTS48 MicroTrack Suspension 48VDC		**1C** Single Circuit		**LC** L-Connector Conductive **LNC** L-Connector Non-Conductive **TNC** T-Connector Non-Conductive **XNC** X-Connector Non-Conductive **TC2** T-Connector Conductive 2 Ways **XC2** X-Connector Conductive 2 Ways		**BK** Black **MW** Matte White RAL 9003

FLEX CONNECTOR

Flexable 48VDC Connector joins two sections of track at any angle.

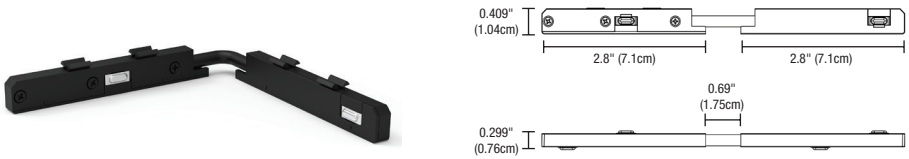

System		Circuit		Type		Finish
MT48	–	**1C**	–	**FXC**	–	**BK**
MT48 MicroTrack 48VDC		**1C** Single Circuit		**FXC** Flex Connector, 5/8" length		**BK** Black **MW** Matte White RAL 9003

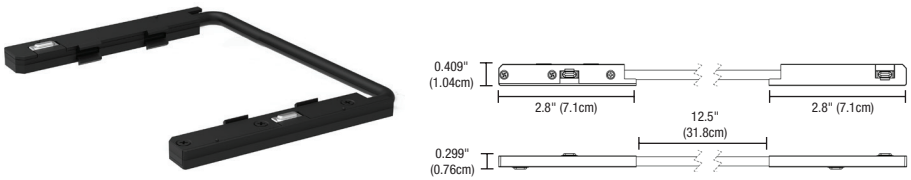

System		Circuit		Type		Finish
MT48	–	**1C**	–	**FXCL**	–	**BK**
MT48 MicroTrack 48VDC		**1C** Single Circuit		**FXCL** Flex Connector Long, 12" length		**BK** Black **MW** Matte White RAL 9003

ADDITIONAL PARTS

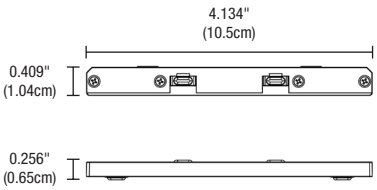

STRAIGHT CONNECTOR (INCLUDED WITH EACH TRACK)

Straight 48VDC Connector joins two track sections end to end and is concealed by the slot covers.

System		Circuit		Type		Finish
MT48	–	**1C**	–	**SC**	–	**BK**
MT48 MicroTrack 48VDC		**1C** Single Circuit		**SC** Straight Connector Conductive **SNC** Straight Connector Non-Conductive		**BK** Black **MW** Matte White RAL 9003

MTS48 MicroTrack™ SUSPENSION

48VDC CLASS 2, SINGLE CIRCUIT, SUSPENSION TRACK SYSTEM

PROJECT

FIXTURE TYPE

DATE

REV 08.17.26

SUSPENSION POWER CONNECTOR (INCLUDED WITH POWER FEED)

Includes 12ft power cable.

System		Circuit		Type		Finish
MTS48	–	1C	–	EP	–	BK
MTS48 MicroTrack Suspension 48VDC		**1C** Single Circuit		**EP** End Power Feed		**BK** Black **MW** Matte White RAL 9003

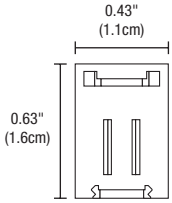

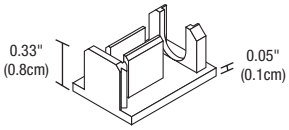

END CAP (INCLUDED WITH EACH TRACK)

System		Circuit		Type		Finish
MTS48	–	1C	–	CA	–	BK
MTS48 MicroTrack Suspension 48VDC		**1C** Single Circuit		**CA** End Cap		**BK** Black **MW** Matte White RAL 9003

OPAQUE SLOT COVER (INCLUDED WITH EACH TRACK)

Slot Covers included to conceal conductors and track slots.

System		Type		Length in Feet		Cover Color
MT48	–	SCO	–	8FT	–	BK
MT48 MicroTrack 48VDC		**SCO** Opaque Cover for Track Slot		**8FT** 8'		**BK** Black **MW** Matte White RAL 9003

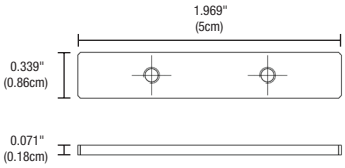

REINFORCEMENT JOINER (INCLUDED WITH EACH TRACK)

Reinforcement joiner used for cutting and mechanically joining two tracks together.

System		Type
MT48	–	J1
MT48 MicroTrack 48VDC		**J1** Reinforcement Joiner

WIRING DIAGRAM

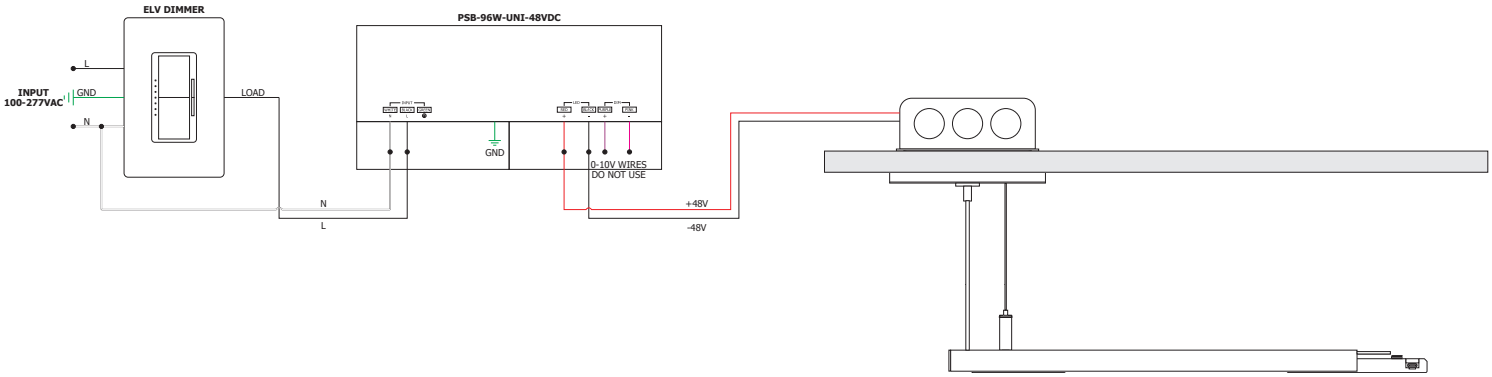

MT48 MicroTrack™ TRACK HEADS

48VDC WITH INTEGRATED LED, ETL LISTED

PURE EDGE™ Pure Smart Lighting

PROJECT

FIXTURE TYPE

DATE

REV 08.17.26

PureEdge MT48 Track Heads are compatible with all MicroTrack™ Systems. May also be ordered with a MonoPoint Canopy.

TEENY (BUT POWERFUL)

712 LM @ 3000K, 6 WATT, TITLE 24

Quarter for Scale

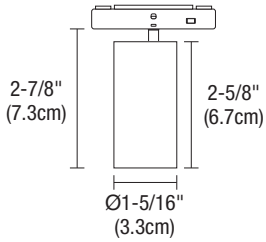

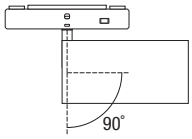

*For lenses and lens accessories, refer to the accessories page

System		Fixture		Wattage		Beam Spread		Color Temperature		Finish
MT48	–	**TEE**	–	**6W**	–	**NS**	–	**30K**	–	**BK**

MT48 MicroTrack 48VDC

TEE Teeny Track Head

6W 6 Watts

NS Narrow Spot 15°
SP Spot 24°
NF Narrow Flood 36°
FL Flood 50°

24K 2400K Amber White
27K 2700K Very Warm White
30K 3000K Warm White
30D* 3000K dims to 1800K
35K 3500K Neutral White
40K 4000K Cool White
*Uses 5 Watts and is not compatible with NS (15°) lens

BK Black Powder Coat
MW Matte White Powder Coat RAL 9003

	TEENY (WITH NARROW SPOT 15° LENS)					
COLOR TEMPERATURE	24K	27K	30K	30D*	35K	40K
TOTAL LUMENS	676	684	712	373	817	862
WATTS	6	6	6	5	6	6
LUMENS PER WATT (lm/w)	113	114	119	75	136	144
CRI	95+	95+	95+	95+	95+	95+

*30D - Warm Dim (5 Watts)

SLIM

671 LM @ 3000K, 6 WATT, TITLE 24

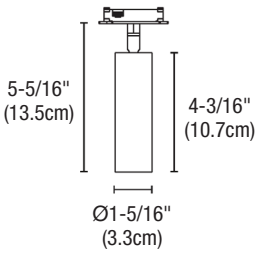

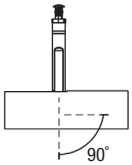

*For lenses and lens accessories, refer to the accessories page

System		Fixture		Wattage		Beam Spread		Color Temperature		Finish
MT48	–	**SLM**	–	**6W**	–	**NS**	–	**30K**	–	**BK**

MT48 MicroTrack 48VDC

SLM Slim Track Head

6W 6 Watts

NS Narrow Spot 15°
SP Spot 24°
NF Narrow Flood 36°
FL Flood 50°

24K 2400K Amber White
27K 2700K Very Warm White
30K 3000K Warm White
30D* 3000K dims to 1800K
35K 3500K Neutral White
40K 4000K Cool White
*Not compatible with the **NS** (15°) lens

BK Black Powder Coat
MW Matte White Powder Coat RAL 9003
SB Satin Brass
SN Satin Nickel

	SLIM (WITH NARROW SPOT 15° LENS)					
COLOR TEMPERATURE	24K	27K	30K	30D	35K	40K
TOTAL LUMENS	637	644	671	505	770	812
WATTS	6	6	6	6	6	6
LUMENS PER WATT (lm/w)	106	107	112	84	128	135
CRI	95+	95+	95+	95+	95+	95+

MT48 MicroTrack™ TRACK HEADS

48VDC WITH INTEGRATED LED, ETL LISTED

PURE EDGE™ Pure Smart Lighting

PROJECT

FIXTURE TYPE

DATE

REV 08.17.26

PureEdge MT48 Track Heads are compatible with all MicroTrack™ Systems.

PICO & PICO ZOOM

965 LM @ 3000K, 10 WATT, TITLE 24 (PICO) / 750 LM @ 3000K, 10 WATTS, TITLE 24 (PICO ZOOM)

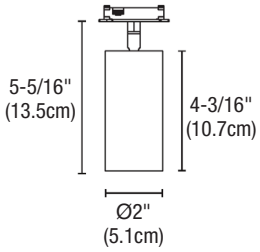

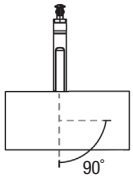

*For lenses and lens accessories, refer to the accessories page

System		Fixture		Wattage		Beam Spread		Color Temperature		Finish	
MT48	–	**PCO**	–	**10W**	–	**FL**	–	**30K**	–	**BK**	

MT48 MicroTrack 48VDC

PCO Pico Track Head

PCZ Pico Zoom Track Head, NSFL Beam Spread

10W 10 Watts

NS Narrow Spot 15°
SP Spot 24°
NF Narrow Flood 36°
FL Flood 50°

NSFL Narrow Spot 15° to Flood 50° (Pico Zoom Only)

24K 2400K Amber White
27K 2700K Very Warm White
30K 3000K Warm White
30D 3000K Warm Dim
35K 3500K Neutral White
40K 4000K Cool White

BK Black Powder Coat
MW Matte White Powder Coat RAL 9003, Matte White stem
SB* Satin Brass
SN* Satin Nickel

*Not available with Pico Zoom

	PICO (WITH SPOT 24° LENS)						PICO ZOOM (WITH 50° BEAM SPREAD)					
COLOR TEMPERATURE	24K	27K	30K	30D	35K	40K	24K	27K	30K	30D	35K	40K
TOTAL LUMENS	917	926	965	853	1107	1168	713	720	750	578	860	908
WATTS	10	10	10	10	10	10	11	11	11	11	11	11
LUMENS PER WATT (lm/w)	92	93	97	85	111	117	65	65	65	68	53	78	83
CRI	97+	97+	97+	97+	97+	97+	97+	97+	97+	97+	97+	97+

POP & POP ZOOM

1865 LM @ 3000K, 15 WATT, TITLE 24 (POP) / 1062 LM @ 3000K, 15 WATT, TITLE 24 (POP ZOOM)

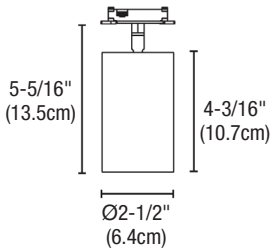

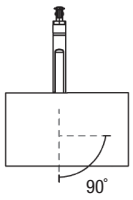

*For lenses and lens accessories, refer to the accessories page

System		Fixture		Wattage		Beam Spread		Color Temperature		Finish	
MT48	–	**POP**	–	**15W**	–	**NS**	–	**30K**	–	**BK**	

MT48 MicroTrack 48VDC

POP Pop Track Head

POZ Pop Zoom Track Head, NSFL Beam Spread

15W 15 Watts

NS Narrow Spot 15°
SP Spot 24°
NF Narrow Flood 35°
FL Flood 50°

NSFL Narrow Spot 15° to Flood 50° (Pop Zoom Only)

24K 2400K Amber White
27K 2700K Very Warm White
30K 3000K Warm White
30D* 3000K Warm Dim
35K 3500K Neutral White
40K 4000K Cool White

*Not compatible with FL (50°) lens

BK Black Powder Coat
MW Matte White Powder Coat RAL 9003, Matte White stem
SB* Satin Brass
SN* Satin Nickel

*Not available with Pop Zoom

	POP (WITH FLOOD 50° LENS)						POP ZOOM (WITH 50° BEAM SPREAD)					
COLOR TEMPERATURE	24K	27K	30K	30D*	35K	40K	24K	27K	30K	30D	35K	40K
TOTAL LUMENS	1772	1790	1865	1051	2140	2257	1009	1020	1062	878	1218	1285
WATTS	15	15	15	12	15	15	15	15	15	15	15	15
LUMENS PER WATT (lm/w)	118	119	124	88	143	150	67	68	68	71	55	81	86
CRI	95+	95+	95+	97+	95+	95+	98+	98+	98+	98+	98+	98+

*30D - Warm Dim (12 Watts), Narrow Flood 35° Lens

MT48 MicroTrack™ TRACK HEADS

48VDC WITH INTEGRATED LED, ETL LISTED

PURE EDGE™ Pure Smart Lighting

PROJECT

FIXTURE TYPE

DATE

REV 08.17.26

PureEdge MT48 Track Heads are compatible with all MicroTrack™ Systems.

FRAME 1

641 LM @ 3000K, 10 WATT 48VDC CLASS 2, TITLE 24

FRAME 1

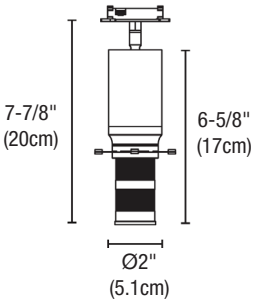

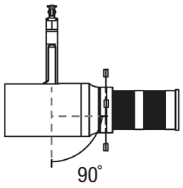

*For color filters and Gobo lenses, refer to the accessories page

System		Fixture		Wattage		Beam Spread		Color Temperature		Finish
MT48	–	**FRM1**	–	**10W**	–	**SPNF**	–	**30K**	–	**BK**

MT48 MicroTrack 48VDC

FRM1 Frame 1 Track Head

10W 10 Watts

SPNF Spot 20° to Narrow
Flood 30°

24K 2400K Amber White
27K 2700K Very Warm White
30K 3000K Warm White
30D 3000K Warm Dim
35K 3500K Neutral White
40K 4000K Cool White

BK Black Powder Coat
MW Matte White Powder Coat RAL 9003

	FRAME 1 (WITH 30° BEAM SPREAD)					
COLOR TEMPERATURE	24K	27K	30K	30D	35K	40K
TOTAL LUMENS	609	615	641	494	735	776
WATTS	10	10	10	11	10	10
LUMENS PER WATT (lm/w)	55	56	58	45	67	71
CRI	97+	97+	97+	97+	97+	97+

MINI LIGHT BAR

134 LM @ 3000K, 5 WATT, 12" LENGTH

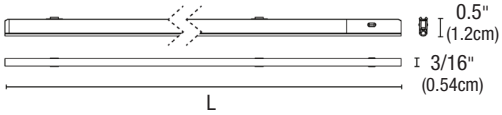

5W12: 11-7/16" (29cm)
9W24: 22-13/16" (58cm)
14W36: 34-5/8" (87cm)

System		Fixture		Wattage		Color Temperature		Finish
MT48	–	**MLB**	–	**5W12**	–	**30K**	–	**BK**

MT48 MicroTrack 48VDC

MLB Mini Light Bar

5W12 5 Watts, 12" Length
9W24 9 Watts, 24" Length
14W36 14 Watts, 36" Length

27K 2700K Very Warm White
30K 3000K Warm White
35K 3500K Neutral White
40K 4000K Cool White

BK* Black Powder Coat

*Mini Light Bar is tucked into track, only lens is visible

	MINI LIGHT BAR											
WATTAGE	5W				9W				14W			
COLOR TEMPERATURE	27K	30K	35K	40K	27K	30K	35K	40K	27K	30K	35K	40K
TOTAL LUMENS	129	134	154	162	273	284	326	344	427	445	511	538
LUMENS PER WATT (lm/w)	26	27	31	32	30	32	36	38	31	32	36	38
CRI	90+	90+	90+	90+	90+	90+	90+	90+	90+	90+	90+	90+

MT48 MicroTrack™ TRACK HEADS

48VDC WITH INTEGRATED LED, ETL LISTED

PURE EDGE™ Pure Smart Lighting

PROJECT

FIXTURE TYPE

DATE

REV 08.17.26

LIGHT BAR

400 LM @ 3000K, 6 WATT, 12" LENGTH, TITLE 24

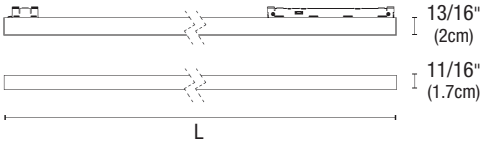

6W12: 11-11/16" (29.7cm)
11W24: 23-1/4" (59cm)
17W36: 34-13/16" (88.4cm)

System		Fixture		Wattage		Color Temperature		Finish
MT48	–	**LB**	–	**6W12**	–	**30K**	–	**BK**

MT48 MicroTrack 48VDC

LB Light Bar

6W12 6 Watts, 12" Length
11W24 11 Watts, 24" Length
17W36 17 Watts, 36" Length

27K 2700K Very Warm White
30K 3000K Warm White
35K 3500K Neutral White
40K 4000K Cool White

BK Black Powder Coat
MW Matte White Powder Coat RAL 9003

	LIGHT BAR WITH 140° LENS											
WATTAGE	6W - 12" (11-11/16")				11W - 24" (23-1/4")				17W - 36" (34-13/16")			
COLOR TEMPERATURE	27K	30K	35K	40K	27K	30K	35K	40K	27K	30K	35K	40K
TOTAL LUMENS	384	400	459	484	768	800	918	968	1152	1200	1377	1452
LUMENS PER WATT (lm/w)	64	67	76	81	128	133	153	161	192	200	229	242
CRI	90+	90+	90+	90+	90+	90+	90+	90+	90+	90+	90+	90+

LIGHT BAR LOUVER

129 LM @ 3000K, 6 WATT, 12" LENGTH, TITLE 24

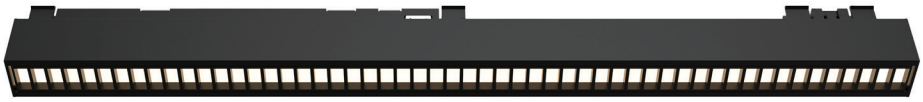

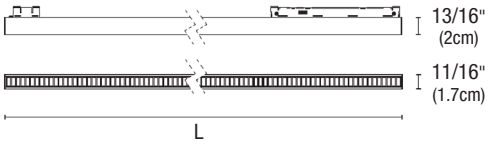

6W12: 11-11/16" (29.7cm)
11W24: 23-1/4" (59cm)
17W36: 34-13/16" (88.4cm)

System		Fixture		Wattage		Color Temperature		Finish
MT48	–	**LBL**	–	**6W12**	–	**30K**	–	**BK**

MT48 MicroTrack 48VDC

LBL Light Bar Louver

6W12 6 Watts, 12" Length
11W24 11 Watts, 24" Length
17W36 17 Watts, 36" Length

27K 2700K Very Warm White
30K 3000K Warm White
35K 3500K Neutral White
40K 4000K Cool White

BK Black Powder Coat
MW Matte White Powder Coat RAL 9003

	LIGHT BAR LOUVER & 120° LENS											
WATTAGE	6W - 12" (11-11/16")				11W - 24" (23-1/4")				17W - 36" (34-13/16")			
COLOR TEMPERATURE	27K	30K	35K	40K	27K	30K	35K	40K	27K	30K	35K	40K
TOTAL LUMENS	124	129	148	156	248	258	296	312	372	387	444	468
LUMENS PER WATT (lm/w)	21	22	25	26	41	43	49	52	62	65	74	78
CRI	90+	90+	90+	90+	90+	90+	90+	90+	90+	90+	90+	90+

MT48 MicroTrack™ TRACK HEADS

48VDC WITH INTEGRATED LED, ETL LISTED

PURE EDGE™ Pure Smart Lighting

PROJECT

FIXTURE TYPE

DATE

REV 08.17.26

LIGHT BAR HEXCELL LOUVER

168 LM @ 3000K, 6 WATT, 12" LENGTH, TITLE 24

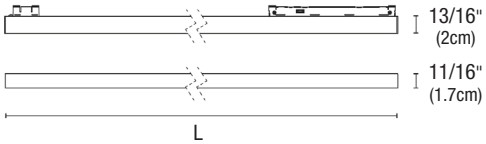

6W12: 11-11/16" (29.7cm)
11W24: 23-1/4" (59cm)
17W36: 34-13/16" (88.4cm)

System		Fixture		Wattage		Color Temperature		Finish
MT48	–	**LBH**	–	**6W12**	–	**30K**	–	**BK**

MT48 MicroTrack 48VDC

LBH Light Bar Hexcell Louver

6W12 6 Watts, 12" Length
11W24 11 Watts, 24" Length
17W36 17 Watts, 36" Length

27K 2700K Very Warm White
30K 3000K Warm White
35K 3500K Neutral White
40K 4000K Cool White

BK Black Powder Coat
MW Matte White Powder Coat RAL 9003

	LIGHT BAR WITH HEXCELL LOUVER & 120° LENS											
WATTAGE	6W - 12" (11-11/16")				11W - 24" (23-1/4")				17W - 36" (34-13/16")			
COLOR TEMPERATURE	27K	30K	35K	40K	27K	30K	35K	40K	27K	30K	35K	40K
TOTAL LUMENS	161	168	193	203	323	336	385	407	484	504	578	610
LUMENS PER WATT (lm/w)	27	28	32	34	54	56	64	68	81	84	96	102
CRI	90+	90+	90+	90+	90+	90+	90+	90+	90+	90+	90+	90+

LIGHT BAR ACCENT

548 LM @ 3000K, 9 WATT, 6" LENGTH, TITLE 24

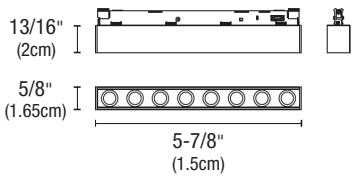

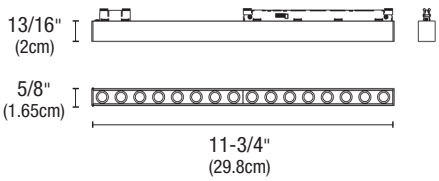

System		Fixture		Wattage		Beam Spread		Color Temperature		Finish
MT48	–	**BA**	–	**9W6**	–	**NF**	–	**30K**	–	**BB**

MT48 MicroTrack 48VDC

BA Bar Accent

9W6 9 Watts, 6" Length
16W12 16 Watts, 12" Length

NF Narrow Flood 30°

27K 2700K Very Warm White
30K 3000K Warm White
35K 3500K Neutral White
40K 4000K Cool White

BB Black Fixture Black Baffle
BC Black Fixture Crystal Baffle
BG Black Fixture Gold Baffle
MB Matte White Fixture Black Baffle
MC Matte White Fixture Crystal Baffle
MG Matte White Fixture Gold Baffle

	LIGHT BAR ACCENT WITH 30° LENS							
WATTAGE	9W				16W			
COLOR TEMPERATURE	27K	30K	35K	40K	27K	30K	35K	40K
TOTAL LUMENS	526	548	629	663	1005	1047	1201	1267
LUMENS PER WATT (lm/w)	88	91	105	111	168	175	200	211
CRI	90+	90+	90+	90+	90+	90+	90+	90+

MT48 MicroTrack™ TRACK HEADS

48VDC WITH INTEGRATED LED, ETL LISTED

PURE EDGE™ Pure Smart Lighting

PROJECT

FIXTURE TYPE

DATE

REV 08.17.26

LIGHT BAR ACCENT HEXCELL LOUVER

270 LM @ 3000K, 9 WATT, 6" LENGTH, TITLE 24

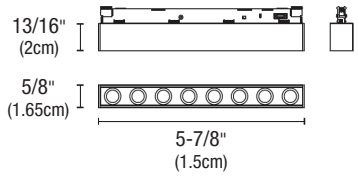

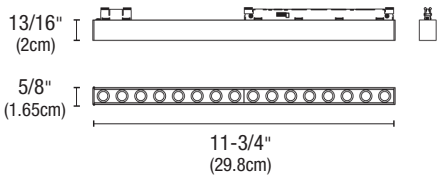

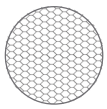

Hexcell Louver Detail

System		Fixture		Wattage		Beam Spread		Color Temperature		Finish
MT48	–	**BAH**	–	**9W6**	–	**NF**	–	**30K**	–	**BK**

MT48 MicroTrack 48VDC

BAH Bar Accent Hexcell Louver

9W6 9 Watts, 6" Length
16W12 16 Watts, 12" Length

NF Narrow Flood 30°

27K 2700K Very Warm White
30K 3000K Warm White
35K 3500K Neutral White
40K 4000K Cool White

BB Black Fixture Black Baffle
BC Black Fixture Crystal Baffle
BG Black Fixture Gold Baffle
MB Matte White Fixture Black Baffle
MC Matte White Fixture Crystal Baffle
MG Matte White Fixture Gold Baffle

	LIGHT BAR ACCENT WITH HEXCELL LOUVER & 30° LENS							
WATTAGE	9W				16W			
COLOR TEMPERATURE	27K	30K	35K	40K	27K	30K	35K	40K
TOTAL LUMENS	259	270	310	327	493	514	590	622
LUMENS PER WATT (lm/w)	43	45	52	54	82	86	98	104
CRI	90+	90+	90+	90+	90+	90+	90+	90+

LIGHT BAR ACCENT TILT

548 LM @ 3000K, 9 WATT, 6" LENGTH, TITLE 24

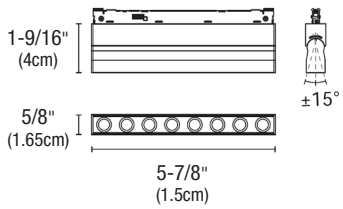

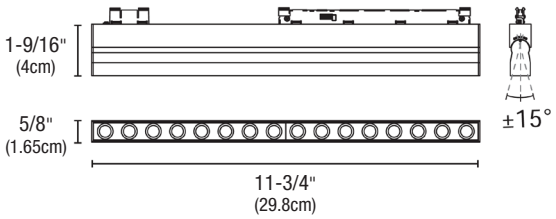

System		Fixture		Wattage		Beam Spread		Color Temperature		Finish
MT48	–	**BAT**	–	**9W6**	–	**NF**	–	**30K**	–	**BK**

MT48 MicroTrack 48VDC

BAT Bar Accent Tilt

9W6 9 Watts, 6" Length
16W12 16 Watts, 12" Length

NF Narrow Flood 30°

27K 2700K Very Warm White
30K 3000K Warm White
35K 3500K Neutral White
40K 4000K Cool White

BB Black Fixture Black Baffle
BC Black Fixture Crystal Baffle
BG Black Fixture Gold Baffle
MB Matte White Fixture Black Baffle
MC Matte White Fixture Crystal Baffle
MG Matte White Fixture Gold Baffle

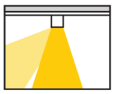

	LIGHT BAR ACCENT ROTATABLE WITH 30° LENS							
WATTAGE	9W				16W			
COLOR TEMPERATURE	27K	30K	35K	40K	27K	30K	35K	40K
TOTAL LUMENS	526	548	629	663	1005	1047	1201	1267
LUMENS PER WATT (lm/w)	88	91	105	111	168	175	200	211
CRI	90+	90+	90+	90+	90+	90+	90+	90+

MT48 MicroTrack™ TRACK HEADS

48VDC WITH INTEGRATED LED, ETL LISTED

PURE EDGE™ Pure Smart Lighting

PROJECT

FIXTURE TYPE

DATE

REV 08.17.26

LIGHT BAR ACCENT TILT HEXCELL LOUVER

270 LM @ 3000K, 9 WATT, 6" LENGTH, TITLE 24

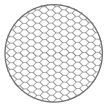

Hexcell Louver Detail

System		Fixture		Wattage		Beam Spread		Color Temperature		Finish
MT48	–	**BATH**	–	**9W6**	–	**NF**	–	**30K**	–	**BB**

MT48 MicroTrack 48VDC

BATH Bar Accent Tilt Hexcell Louver

9W6 9 Watts, 6" Length
16W12 16 Watts, 12" Length

NF Narrow Flood 30°

27K 2700K Very Warm White
30K 3000K Warm White
35K 3500K Neutral White
40K 4000K Cool White

BB Black Fixture Black Baffle
BC Black Fixture Crystal Baffle
BG Black Fixture Gold Baffle
MB Matte White Fixture Black Baffle
MC Matte White Fixture Crystal Baffle
MG Matte White Fixture Gold Baffle

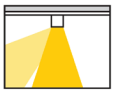

	LIGHT BAR ACCENT ROTATABLE WITH HEXCELL LOUVER & 30° LENS							
WATTAGE	9W				16W			
COLOR TEMPERATURE	27K	30K	35K	40K	27K	30K	35K	40K
TOTAL LUMENS	259	270	310	327	493	514	590	622
LUMENS PER WATT (lm/w)	43	45	52	54	82	86	98	104
CRI	90+	90+	90+	90+	90+	90+	90+	90+

LIGHT BAR WALL WASH

548 LM @ 3000K, 9 WATT, 6" LENGTH, TITLE 24

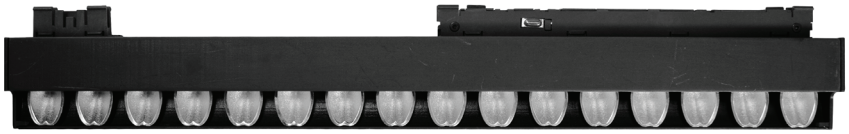

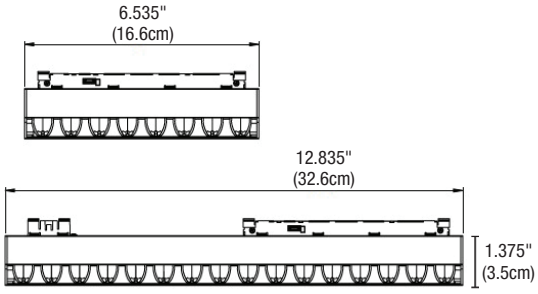

*For a consistent wall wash, place Light Bar Wall Wash fixtures 20" from the wall and 16" apart

System		Fixture		Wattage		Color Temperature		Finish
MT48	–	**BWW**	–	**9W6**	–	**30K**	–	**BK**

MT48 MicroTrack 48VDC

BWW Bar Wall Wash

9W6 9 Watts, 6" Length
16W12 16 Watts, 12" Length

27K 2700K Very Warm White
30K 3000K Warm White
35K 3500K Neutral White
40K 4000K Cool White

BK Black Powder Coat
MW Matte White Powder Coat RAL 9003

	LIGHT BAR WALL WASH							
WATTAGE	9W				16W			
COLOR TEMPERATURE	27K	30K	35K	40K	27K	30K	35K	40K
TOTAL LUMENS	526	548	629	663	1005	1047	1201	1267
LUMENS PER WATT (lm/w)	88	91	105	111	168	175	200	211
CRI	90+	90+	90+	90+	90+	90+	90+	90+

MT48 MicroTrack™ TRACK HEADS

48VDC WITH INTEGRATED LED, ETL LISTED

PROJECT

FIXTURE TYPE

DATE

REV 08.17.26

MICROTRACK™ FLEX LIGHT

99 LM@ 3000K, 3 WATT

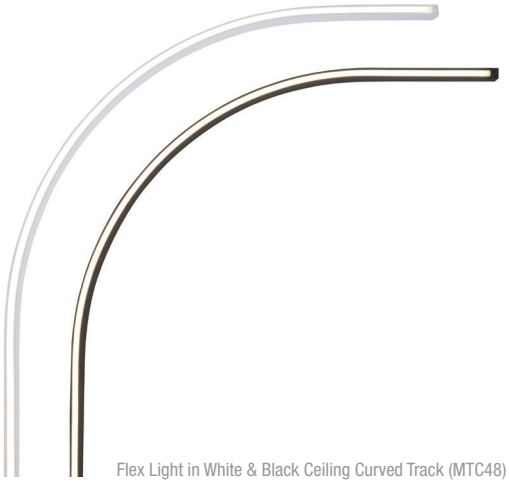

Flex Light in White & Black Ceiling Curved Track (MTC48)

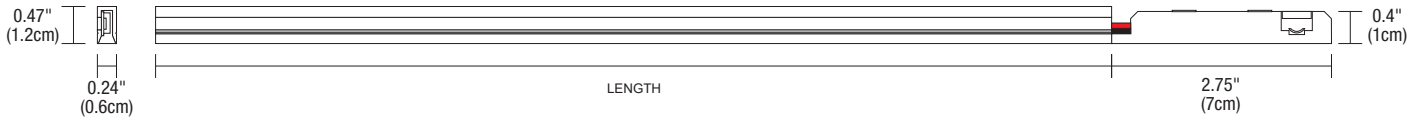

System		Fixture		Wattage		Length		Color Temperature
MT48	–	**FN2**	–	**3W**	–	**16FT**	–	**30K**

MT48 MicroTrack 48VDC
FN2 Flex Light
3W 3 Watts per foot
1-16FT 1-16 Feet
27K 2700K Very Warm White
30K 3000K Warm White
35K 3500K Neutral White
40K 4000K Cool White

	FLEX LIGHT			
COLOR TEMPERATURE	27K	30K	35K	40K
TOTAL LUMENS	95	99	114	85
WATTS	3	3	3	3
LUMENS PER WATT (lm/w)	32	33	38	28
CRI	90+	90+	90+	90+

MT48 MicroTrack™ TRACK HEADS

48VDC WITH INTEGRATED LED, ETL LISTED

PURE EDGE™ Pure Smart Lighting

PROJECT

FIXTURE TYPE

DATE

REV 08.17.26

TOTEM PENDANT

596 LM @ 3000K, 7 WATT

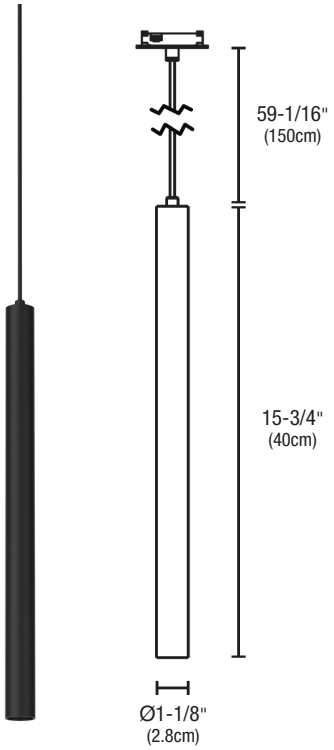

System		Fixture		Wattage		Beam Spread		Color Temperature		Finish
MT48	–	**TTP**	–	**7W**	–	**SP**	–	**30K**	–	**BK**
MT48 MicroTrack 48VDC		**TTP** Totem Pendant		**7W** 7 Watts		**SP** Spot 20° **NF** Narrow Flood 24° **FL** Flood 36° **WF** Wide Flood 56°		**27K** 2700K Very Warm White **30K** 3000K Warm White **35K** 3500K Neutral White **40K** 4000K Cool White		**BK** Black **MW** Matte White

	TOTEM PENDANT			
WATTAGE	7W			
COLOR TEMPERATURE	27K	30K	35K	40K
TOTAL LUMENS	572	596	685	721
LUMENS PER WATT (lm/w)	82	85	98	103
CRI	90+	90+	90+	90+

TOWER PENDANT

707 LM @ 3000K, 7 WATT

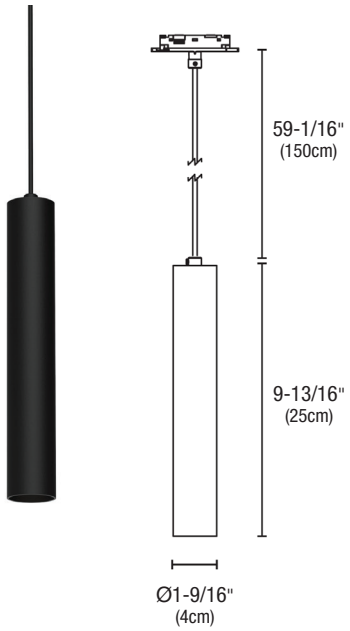

System		Fixture		Wattage		Beam Spread		Color Temperature		Finish
MT48	–	**TOP**	–	**7W**	–	**SP**	–	**30K**	–	**BK**
MT48 MicroTrack 48VDC		**TOP** Tower Pendant		**7W** 7 Watts		**SP** Spot 20° **NF** Narrow Flood 24° **FL** Flood 36° **WF** Wide Flood 47°		**27K** 2700K Very Warm White **30K** 3000K Warm White **35K** 3500K Neutral White **40K** 4000K Cool White		**BK** Black **MW** Matte White

	TOTEM PENDANT			
WATTAGE	7W			
COLOR TEMPERATURE	27K	30K	35K	40K
TOTAL LUMENS	679	707	813	855
LUMENS PER WATT (lm/w)	97	101	116	122
CRI	90+	90+	90+	90+

MT48 MicroTrack™ TRACK HEADS

48VDC WITH INTEGRATED LED, ETL LISTED

PURE EDGE Pure Smart Lighting

PROJECT

FIXTURE TYPE

DATE

REV 08.17.26

MIDAS PENDANT

1776 LM @ 3000K, 15 WATT

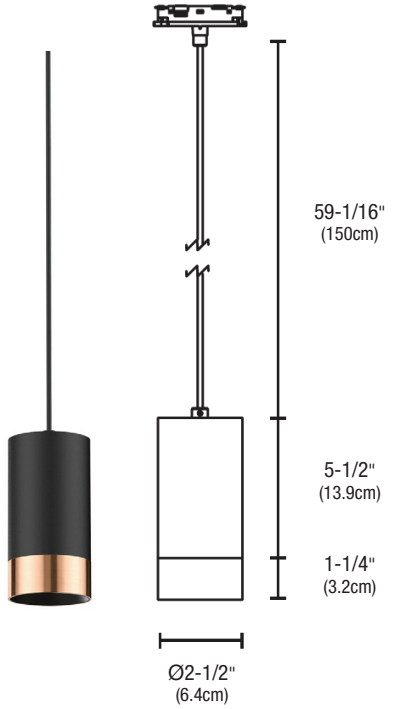

*For lens accessories, refer to the accessories page

System		Fixture		Wattage		Beam Spread		Color Temperature		Finish
MT48	–	**MIP**	–	**15W**	–	**SP**	–	**30K**	–	**BK**
MT48 MicroTrack 48VDC		**MIP** Midas Pendant		**15W** 15 Watts		**SP** Spot 20° **NF** Narrow Flood 25° **FL** Flood 38° **WF** Wide Flood 50°		**27K** 2700K Very Warm White **30K** 3000K Warm White **35K** 3500K Neutral White **40K** 4000K Cool White		**BK** Black **MW** Matte White **BRG** Black and Rose Gold

	MIDAS PENDANT			
WATTAGE	15W			
COLOR TEMPERATURE	27K	30K	35K	40K
TOTAL LUMENS	1705	1776	2042	2149
LUMENS PER WATT (lm/w)	114	118	136	143
CRI	90+	90+	90+	90+

DROP PENDANT

1755 LM @ 3000K, 15 WATT

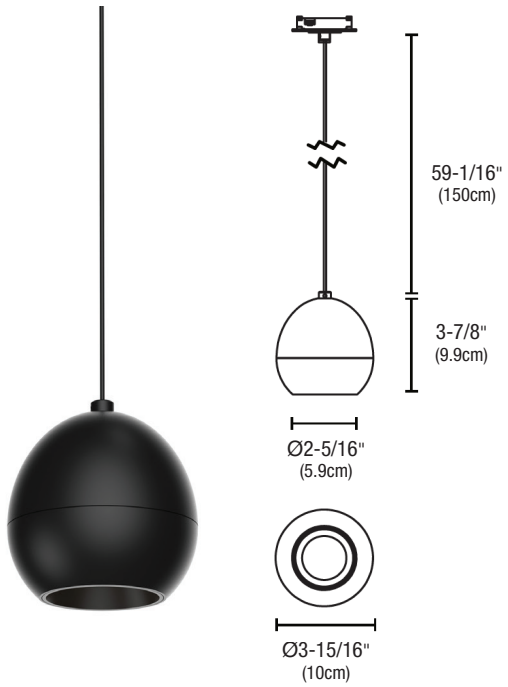

System		Fixture		Wattage		Beam Spread		Color Temperature		Finish
MT48	–	**DP**	–	**15W**	–	**SP**	–	**30K**	–	**BK**
MT48 MicroTrack 48VDC		**DP** Drop Pendant		**15W** 15 Watts		**SP** Spot 20° **NF** Narrow Flood 25° **FL** Flood 38° **WF** Wide Flood 50°		**27K** 2700K Very Warm White **30K** 3000K Warm White **35K** 3500K Neutral White **40K** 4000K Cool White		**BK** Black **MW** Matte White

	DROP PENDANT			
WATTAGE	15W			
COLOR TEMPERATURE	27K	30K	35K	40K
TOTAL LUMENS	1685	1755	2018	2124
LUMENS PER WATT (lm/w)	112	117	135	142
CRI	90+	90+	90+	90+

MT48 MicroTrack™ TRACK HEADS

48VDC WITH INTEGRATED LED, ETL LISTED

PURE EDGE™ Pure Smart Lighting

PROJECT

FIXTURE TYPE

DATE

REV 08.17.26

Accessories

TEENY / SLIM OPTICAL LENS		GLASS LENS	LOUVER	FOCUS LENS	LINEAR SPREAD FILM
			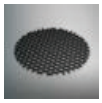		
ORDERING CODE	**(STATIC WHITE)** **OPL-SLM-NS-SW** **OPL-SLM-SP-SW** **OPL-SLM-NF-SW** **OPL-SLM-FL-SW**	**GL9-AS (ASYMMETRIC)** **GL9-SF (SOFT DIFFUSER)**	**L09-H**	**LF09-SF (SOFT FOCUS),** **LF09-MF (MEDIUM FOCUS),** **LF09-WF (WIDE FOCUS)**	**LF09-LS**
LENS SIZE	ø1-5/16" (3.3cm) Diameter	Glass Lens	Hexcell louver eliminates glare.	Soft focus lens is included with every track head. Diffuses the beam, providing uniform illumination.	1-1/8" Dia. Linear Spread Film. Linear spread film: directs the light into an elongated beam. Typical applications using 10°, 15°, 24°.
DESCRIPTIONS	**NS** (15°), **SP** (24°), **NF** (36°), **FL** (50°)				

PICO OPTICAL LENS			GLASS LENS	LOUVER	FOCUS LENS	LINEAR SPREAD FILM
				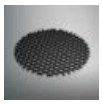		
ORDERING CODE	**(STATIC WHITE)** **OPL-PCO-NS-SW** **OPL-PCO-SP-SW** **OPL-PCO-NF-SW** **OPL-PCO-FL-SW**	**(WARM DIM)** **OPL-PCO-NS-WD** **OPL-PCO-SP-WD** **OPL-PCO-NF-WD** **OPL-PCO-FL-WD**	**GL10-VLS**	**L010-H**	**LF10-SF (SOFT FOCUS),** **LF10-MF (MEDIUM FOCUS),** **LF10-WF (WIDE FOCUS)**	**LF10-LS**
LENS SIZE	ø2" (5.1cm) Diameter		Glass Oval Spread Lens	Hexcell louver eliminates glare.	Soft focus lens is included with every track head. Diffuses the beam, providing uniform illumination.	1-1/4" Dia. Linear Spread Film. Linear spread film: directs the light into an elongated beam. Typical applications using 10°, 18°, 24°.
DESCRIPTIONS	**NS** (18°), **SP** (24°), **NF** (40°), **FL** (50°)					

POP OPTICAL LENS			GLASS LENS	LOUVER	FOCUS LENS	LINEAR SPREAD FILM	SNOOT	
ORDERING CODE	**(STATIC WHITE)** **OPL-POP-NS-SW** **OPL-POP-SP-SW** **OPL-POP-NF-SW** **OPL-POP-FL-SW**	**(WARM DIM)** **OPL-POP-NS-WD** **OPL-POP-SP-WD** **OPL-POP-NF-WD** **OPL-POP-FL-WD**	**GL16-LS**	**L016-H**	**LF16-SF** **(SOFT FOCUS),** **LF16-MF** **(MEDIUM FOCUS),** **LF16-WF** **(WIDE FOCUS)**	**LF16-LS**	**POP-ST-BK** **POP-ST-MW**	**POP-STA-BK** **POP-STA-MW**
LENS SIZE	ø2-1/2" (6.4cm) Diameter		Glass Linear Spread Lens	Hexcell louver elimi-nates glare. 2" Dia.	Soft focus lens is included with every track head. Diffuses the beam, providing uniform illumination.	2" Dia. Linear Spread Film. Linear spread film: directs the light into an elongated beam. Typical applications using 10°, 15°, 25°.	POP Snoot is designed to reduce spill and control glare. In Black or Matte White RAL 9003	Asymmetrical Snoot for Wall Wash with GL12-LS. Reduces spill and control glare. In Black or Matte White RAL 9003
DESCRIPTIONS	**NS** (15°), **SP** (24°), **NF** (36°), **FL** (50°)							

***Cannot be used in Groove Track**

MT48 MicroTrack™ TRACK HEADS

48VDC WITH INTEGRATED LED, ETL LISTED

PROJECT

FIXTURE TYPE

DATE

REV 08.17.26

Accessories

PICO & POP ZOOM		SPREAD LENS	
ACCESSORIES FOR PICO & POP		**(PICO)** **PCZ-VLS-BK** **PCZ-VLS-MW**	**(POP)** **POZ-VLS-BK** **POZ-VLS-MW**
LENS SIZE	ø2-1/2" (6.4cm) Diameter	Oval Spread Lens. In Black or Matte White	

FRAME 1		LENS FILM COLOR FILTER	GOBO LENS
ACCESSORIES FOR FRAME 1		**(FRAME COLOR LENS)**	**(FRAME GOBO LENS)**
		LF-FRM1-BLU **LF-FRM1-RED** **LF-FRM1-YLW**	**(FRAME 1)** **GB-FRM1**
LENS SIZE	ø2-1/2" (6.4cm) Diameter	Frame 1 Lens Film Color filter produces beams of light. Choose for any of Rosco Color films. Custom color filters available.	Frame 1 with a Gobo lens projects your logo or design onto any surface using full color options. For custom Gobo, send your drawings and ideas to our design team: design@PureEdgeLighting.com

MIDAS PENDANT		LOUVER	FOCUS LENS	LINEAR SPREAD FILM
ACCESSORIES FOR MIDAS PENDANT		**LO16-H**	**LF16-SF** **(SOFT FOCUS),** **LF16-MF** **(MEDIUM FOCUS),** **LF16-WF** **(WIDE FOCUS)**	**LF16-LS**
LENS SIZE	ø2-1/2" (6.4cm) Diameter	Hexcell louver eliminates glare. 2" Dia.	Soft focus lens is included with every track head. Diffuses the beam, providing uniform illumination.	2" Dia. Linear Spread Film. Linear spread film: directs the light into an elongated beam. Typical applications using 10°, 15°, 25°.

PDW-100W-DIM-48VDC-WH

2-IN-1 POWER DRIVER AND DIMMER

PROJECT

FIXTURE TYPE

DATE

REV 08.17.26

PDW-100W-DIM-48VDC-WH

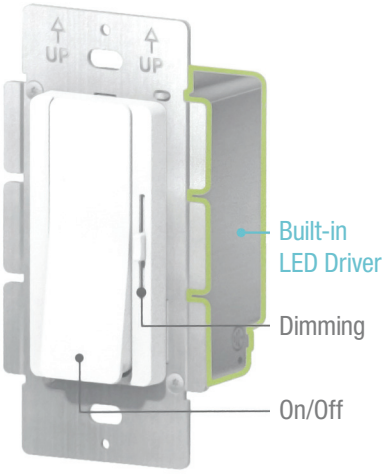

DESCRIPTION

Power Dim 2-in-1 is a dimmer with an integrated LED driver that converts 120VAC to low-voltage 48VDC (up to 96W). Designed for installation in a standard single-gang electrical box, it eliminates the need for separate remote drivers, simplifying installation to provide an option that is as cost-effective as it is time efficient.

PureEdge Lighting's Power Driver combines an ELV dimmer and driver in a single, wall-mounted unit.
Kit includes driver/dimmer, faceplate, and mounting hardware.

The integrated design delivers smooth, flicker-free dimming and avoids driver/switch compatibility issues. Features soft start and built-in short-circuit, overload, and thermal protection. Indoor use only.

For custom quotes and layout assistance, send drawings to design@PureEdgeLighting.com.

INTEGRATED DESIGN

- Combines LED driver and dimmer into a single device
- Soft start
- Short circuit protection
- Overload protection
- Thermal overload protection
- Utilizes 6" wire leads

APPLICATIONS

Indoor

MOUNTING

Fits into a standard single-gang wall box, standard hardwire connection

POWER INPUT

- 120VAC
- Power Factor @ full load: >0.99
- THD (Typ.) @ full load: ≤10%
- Efficiency @ full load: 91.0%
- AC Current (Max.): 0.9A

POWER OUTPUT

- Class 2; 48 volts DC
- 96 watts maximum
- Voltage Tolerance: ±0.5V
- Rated current: 4A

DIMENSIONS

4.13" x 2.12" x 1.99"

COMPLIANCE

Class 2, UL, RoHS

Product		Wattage		Control Type		Voltage		Finish
PDW	–	**100W**	–	**DIM**	–	**48VDC**	–	**WH**
PDW Power Wall Dimmer		**100W** 100 Watts		**DIM** DIM Static White		**48VDC** 48 Volt DC		**WH** White

TM30 DATA
48VDC WITH INTEGRATED LED

PROJECT

FIXTURE TYPE

DATE

REV 08.17.26

2400K | Rf: 84.5 | Rg: 94.4

Color Vector Graphic

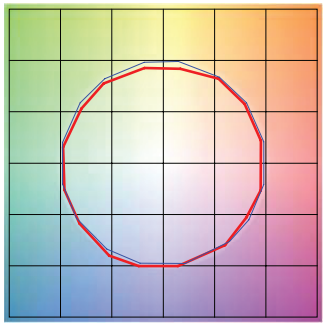

Test Reference

		GRAPHIC SHIFTS %	
HUE BIN	Rf	CHROMA	HUE
1	92	-2.4%	1.5%
2	94.7	-2.1%	-0.0%
3	95.4	-1.9%	-0.1%
4	88.7	-6.7%	-3.1%
5	92.8	-5.6%	1.0%
6	92.7	-3.4%	3.4%
7	89.9	-4.3%	4.1%
8	92.4	-1.4%	4.4%
9	89	-0.6%	5.8%
10	88.9	0.4%	6.2%
11	89.7	4.0%	5.4%
12	92.6	3.0%	-0.7%
13	90.9	1.1%	-7.0%
14	89.9	0.5%	-5.8%
15	92.1	-3.2%	0.1%
16	88.9	-1.7%	-6.3%

2700K | Rf: 87.7 | Rg: 96.1

Color Vector Graphic

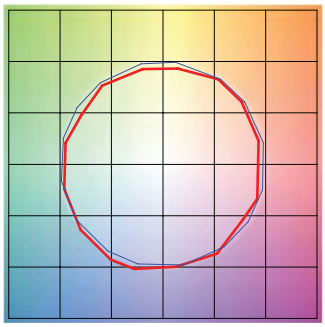

Test Reference

		GRAPHIC SHIFTS %	
HUE BIN	Rf	CHROMA	HUE
1	88.0	-4.3%	2.6%
2	91.6	-2.4%	2.0%
3	93.7	-1.4%	1.9%
4	88.9	-5.6%	-3.1%
5	92.3	-5.5%	-0.5%
6	92.9	-3.5%	0.1%
7	84.5	-7.5%	4.6%
8	90.8	-3.0%	4.4%
9	84.5	-1.3%	8.3%
10	83.9	2.0%	9.8%
11	87.2	5.3%	7.1%
12	89.2	5.4%	-2.6%
13	88.7	0.3%	-7.8%
14	86.8	1.7%	-9.3%
15	87.6	-5.4%	-1.3%
16	83.6	-3.3%	-9.5%

3000K | Rf: 88.1 | Rg: 99.7

Color Vector Graphic

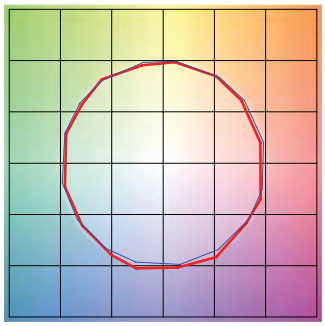

Test Reference

		GRAPHIC SHIFTS %	
HUE BIN	Rf	CHROMA	HUE
1	92.5	-3.1%	0.3%
2	93.3	-2.3%	1.9%
3	90.9	-0.8%	3.9%
4	94.3	-1.1%	1.4%
5	92.5	-2.6%	1.5%
6	96.4	1.2%	-0.3%
7	92.6	-2.5%	-0.0%
8	96.9	-1.4%	0.2%
9	92.3	-1.8%	4.3%
10	86.6	-0.7%	7.0%
11	86.5	2.4%	8.2%
12	89.8	5.9%	1.7%
13	93.9	2.6%	-2.7%
14	89.4	5.1%	-5.8%
15	90.1	-0.1%	-4.7%
16	86.5	0.3%	-9.7%

3500K | Rf: 86.1 | Rg: 95.5

Color Vector Graphic

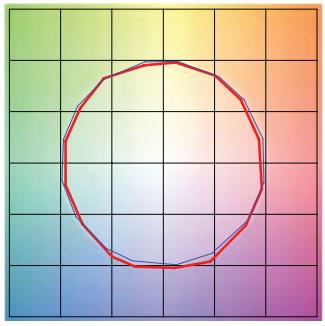

Test Reference

		GRAPHIC SHIFTS %	
HUE BIN	Rf	CHROMA	HUE
1	90.8	-3.8%	0.3%
2	92.3	-2.8%	2.1%
3	89.7	-1.0%	4.3%
4	92.6	-1.4%	1.7%
5	91.8	-3.1%	1.3%
6	96.2	0.8%	-0.4%
7	92.9	-3.2%	0.2%
8	94.3	-2.5%	1.5%
9	90.4	-2.5%	5.2%
10	84.3	-1.4%	9.5%
11	83.1	3.5%	9.8%
12	88.2	4.8%	3.4%
13	94.0	2.7%	-2.0%
14	88.7	5.9%	-5.8%
15	88.7	0.7%	-5.9%
16	86.8	-0.7%	-6.7%

4000K | Rf: 87.6 | Rg: 96.8

Color Vector Graphic

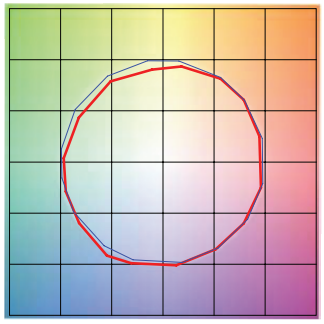

Test Reference

		GRAPHIC SHIFTS %	
HUE BIN	Rf	CHROMA	HUE
1	88.9	-2.4%	2.5%
2	93.3	-0.4%	0.8%
3	94.8	-1.0%	-0.6%
4	87.9	-4.9%	-3.6%
5	85.3	-9.4%	-2.6%
6	90.2	-6.0%	0.2%
7	85.3	-7.6%	4.6%
8	83.7	-4.1%	8.2%
9	79.5	-1.1%	13.8%
10	78.6	1.5%	12.1%
11	83.5	6.4%	7.8%
12	90.9	3.6%	-1.1%
13	88.3	1.7%	-6.3%
14	91.9	-0.4%	-2.2%
15	84.5	-0.9%	-5.5%
16	84.7	-1.1%	-4.4%