VANISHING POINT REBEL

12VAC

DESIGNED BY GREGORY KAY | ASSEMBLED IN AMERICA | PATENT PENDING

REV 04.22.25

VR-FJ12
Vanishing Point .5" Opening Plaster-In, Remote Power supply (Order separately)

V2P-FJ12
Vanishing Point 2" Flush Canopy to drywall, with ELV power supply in J-Box

V2MP-FJ12
Vanishing Point 2" Flush Canopy for Millwork, with ELV power supply in J-Box V2M Millwork canopy with Remote power supply

DESCRIPTION:

The Vanishing Point Rebel Plaster-In System offers four distinct mounting options. Drywall Applications: **VR** - Remote Power Supply (Order Separately) NO visible canopy, you will only see the 0.5" connection at the ceiling as the Fast Jack fixture vanishes into the ceiling. You may feed up to thirty 8 watt LED fixtures with 12V remote power supply. **V2P** - Connection point at ceiling will show a slight outline of the 2.0" round canopy, ELV power supply fits within the J-box. May be painted over to hide 2" round outline of canopy, but will need to be repainted if power supply needs to be replaced. Millwork Application: **V2MR** - Connection point at ceiling 2.0" canopy sits flush in Millwork ceilings for a clean look. You may feed up to thirty 8 watt LED fixtures with 12V remote power supply. **V2MP** - Connection point at ceiling 2.0" canopy sits flush in Millwork ceilings with included ELV power supply that fits inside J-box. For custom quotes and layout assistance, send your drawings and ideas to our design team: design@PureEdgeLighting.com .

FINISH

Antique Bronze	Satin Nickel	White
BZ	**SN**	**WH**

PHYSICAL:

Construction	Spun Brass
Mounting Options	4 options: VR / V2P / V2MP / V2MR Fast Jack Connection
Accessory	Hexcell Louver, Snoot, Film Lens Soft Focus or Linear Spread, Optical Lens, Dichroic Glass Lens. See page 3 for additional spec information.
Fixture Tilt	90°
Fixture Rotation	360°
Average LED Life	35,000 hrs
Warranty	Pro-rated 5 year warranty

LUMEN PERFORMANCE: SORAA BRILLIANT STATIC WHITE	
WATTAGE	7.5W
KELVIN	2700K or 3000K
BEAM ANGLES	10°/25°/36°
LUMEN FLUX	575 to 630
LUMENS PER WATT (lm/w)	77 to 84
CRI	90

LUMEN PERFORMANCE: SOL LIGHT WARM DIM	
WATTAGE	7.73W
KELVIN	3000K dims to 1900K or 2700K dims to 1900K
BEAM ANGLES	24°/36°
LUMEN FLUX	468
LUMENS PER WATT (lm/w)	58
CRI	97

ELECTRICAL:

Input Voltage	**VR / V2MR:** Input Voltage 12VAC Remote Power Class 2 at 60 watt up to 15' away or UL2108 (not included) **V2P / V2MP:** 120-277VAC; Output Voltage 12VAC up to 50 Watts power supply is included in J-box
Power Consumption	Maximum 9 watt LED MR16 lamp GU 5.3 base - 12 volt (sold separately)
Power Supply	Requires 12VAC-compatible power source (order separately)
Dimming	To 1% Percent, Flicker <25%Triac and ELV dimming standard. Compatible with Lutron Diva, Skylark and Legrand ELV dimmers. (Ordered separately).
Location	Suitable for damp or dry location, interior use only
Approvals	ETL (Conforms to UL1598 and CSA 22.2 #250.0) Class 2 with 60 watt Transformer

System		Type		Fixture		Stem Height		Finish
VR	–	FJ12	–	REB	–	1	–	SN

VR Vanishing Point 0.5" Connector In Drywall, No Outline of Canopy at connection point, Remote Power Supply (sold separately)
V2P Vanishing Point 2.0", Slight Outline of 2" Flush of White Canopy, With Power Supply Included in J-Box
V2MR Vanishing Point 2" Millwork Flush-Mount Canopy, Remote Power Supply (sold separately)
V2MP Vanishing 2" Millwork Flush-Mount Canopy, With Power Supply Included in J-Box

FJ12 Fast Jack 12VAC

REB Rebel

1 1.2" (2.5cm)

BZ Antique Bronze
SN Satin Nickel
WH White

PROJECT		FIXTURE TYPE		DATE	

www.PureEdgeLighting.com | Phone: 773.770.1195 | 1718 W. Fullerton Ave. Chicago, IL 60614

PureEdge Lighting reserves the right to modify this specification without prior notice

VANISHING POINT REBEL

12VAC

REV 04.22.25

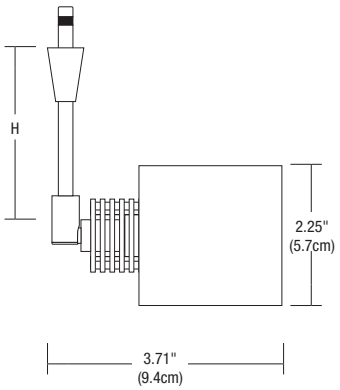

FJ12-REB

POWER SUPPLY IN CANOPY (INCLUDED):
12VAC Class 2 60 Watt ELV Power Supply

REMOTE POWER SUPPLY (SOLD SEPARATELY):
ELV, 0-10V, Universal

DIMMING
Dimming options include Lutron, Legrand Adorne, Leviton and Signify by Phillips compatible dimming controls. (Ordered separately).

WARRANTY / LABELS:
Pro-rated 5 year warranty. Assembled in America
ETL (Conforms to UL1598 and CSA 22.2 #250.0)

VR-FJ12
Vanishing Point Flush to drywall, plaster in, with Remote Power (Ordered separately)

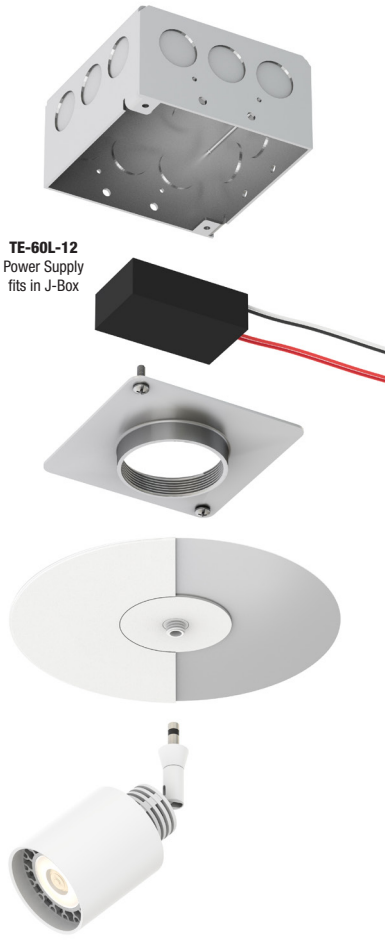

V2P-FJ12
Vanishing Point 2" Flush Canopy to drywall, with ELV power supply in J-Box

V2MP-FJ12
Vanishing Point 2" Flush Canopy for Millwork with Power

PROJECT		FIXTURE TYPE		DATE	

www.PureEdgeLighting.com | Phone: 773.770.1195 | 1718 W. Fullerton Ave. Chicago, IL 60614

PureEdge Lighting reserves the right to modify this specification without prior notice

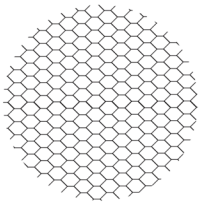

MR16 HEXCELL LOUVER

MR16 Hexcell Louver Accessory eliminates glare. 2" diameter x .125" thick.

Accessory
L016-H

L016-H MR16 Hexcell Louver

ST16-PN ST16-SN STB16-BK

SNOOT

The Snoot prevents glare and focuses the projected light from the lamp.

Accessory		Finish
ST16	–	**SN**

ST16 Snoot MR16
STB16 Snoot MR16

SN Satin Nickel
PN Polished Nickel
BZ Antique Bronze
BK Black

FILM LENS SOFT FOCUS

SF Soft Focus diffuses a beam pattern to provide even illumination. LS Linear spread lens directs 10°, 15°, 25° beams into an elongated shape. This is typically used in long rectangle paintings and art work, 35°, 40°, 60° lamps produce an elongated oval shape used in art work and wall washing.

Film Size		Film Type
LF2.0	–	**SF**

LF2.0 2.0" Film

SF Soft Focus
LS Linear Spread

2" ROUND GLASS OPTICAL LENS

The soft focus lens reduces lamp glare, spread lenses elongate and diffuser lenses diffuse the light beam. UV filter lens allows quality light to pass through while blocking the ultra violet radiation.

Lens		Optical Type
L16	–	**SF**

L16 MR16 Lens

F Frost
LS Linear Spread
LSF Linear Spread Frost
MD Medium Diffuser
SF Soft Focus
UV UV Glass
WD Wide Diffuser
WDF Wide Diffuser Frost

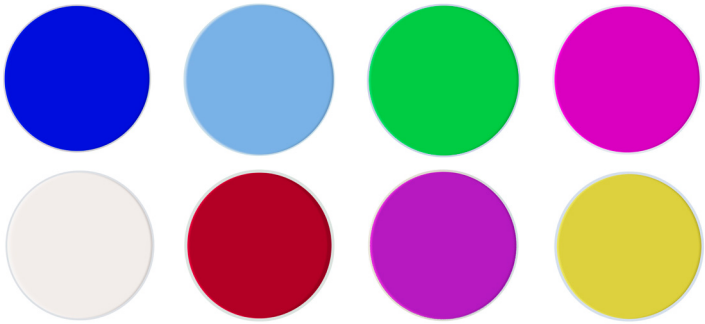

2" ROUND DICHROIC GLASS LENS

Dichroic lenses operate on a passive-reflective basis, reflecting unused wavelengths while allowing desired portions of the spectrum to pass through. Dichroics are high in transmission, producing brighter, cleaner, saturated colors.

Lens		Dichroic Color
L16	–	**RD**

L16 MR16 Lens

BL Blue
CW Cool White (3100K-4250K)
DP Dark Pink
GR Green
MG Magenta
PH Peach
RD Red
YL Yellow

PROJECT		FIXTURE TYPE		DATE	

PureEdge Lighting reserves the right to modify this specification without prior notice

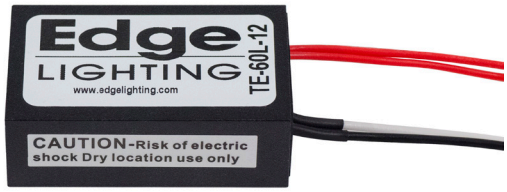

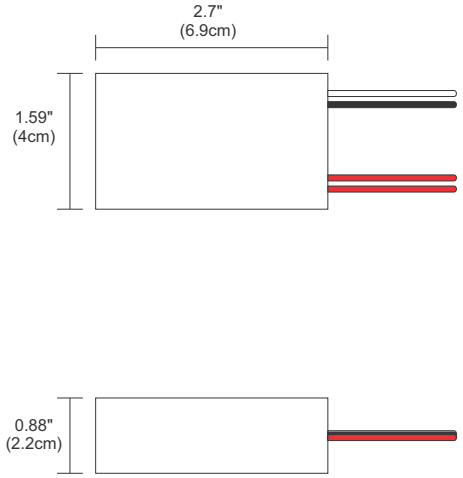

REMOTE 60W 12VAC CLASS 2 POWER SUPPLY

TE-60L-12 60 Watt 12VAC Electronic Transformer converts 120 volt line voltage to 12 volts and features built-in short-circuit protection. The solid, lightweight remote power supply fits inside a standard electrical junction box behind a power feed canopy. Must be in an accessible location or inside an electrical box. Must be within 10' of lamp, max six 9 watt fixtures.

- No load technology, works with LED AC loads
- Isolated output power per NEC and UL safety requirements
- UL recognized/listed Class 2 power supply, meets UL 2108 requirements
- Auto-reset; Short circuit, Overload and Thermal protection
- Soft start
- Dimmable with ELV dimmer

System		Power		Voltage Output
TE	–	60L	–	12

TE Transformer Electronic **60L** 60 Watts **12** 12 Volt AC

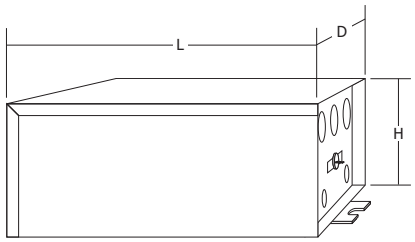

Dimensions:
8.75"(L) x 4.4"(D) x 3.8"(H)
(22.2cm x 11.2cm x 9.7cm)

REMOTE MAGNETIC TRANSFORMER UL2108
150W AND 300W 12VAC POWER SUPPLY (SOLD SEPARATELY)

The 150 watt or 300 watt 12 Volt Remote Magnetic Transformer converts 120VAC line voltage into 12VAC low voltage power and are protected by fast-acting circuit breakers. The low voltage output powers the Vanishing Point System up to 40' away, the 12 volt wire will be in conduit in accordance with UL2108. Power up to 30 Vanishing Point fixtures using a single power supply at 300 Watts and 9 Watts per Lamp. Dimmable with Magnetic Low Voltage Dimmer sold separately.

System		Power		Voltage Output
T	–	300	–	12

T Transformer Magnetic **150** 150 Watt Magnetic Remote Transformer **300** 300 Watt Magnetic Remote Transformer **12** 12 Volt AC

PROJECT		FIXTURE TYPE		DATE	

PureEdge Lighting reserves the right to modify this specification without prior notice

12VAC LED MR16

REV 04.22.25

SOL LIGHT WARM DIM

Brand	Ordering Code	Watts	CRI	R9	Beam Angle (Degrees)	Lamp Life (Hours)	CCT Warm Dim	Total Lumens	Lumens Per Watt	Voltage	Certification	Halogen Equivalent
PureEdge Lighting	MR16-12V-8W-FL-27KWDH-SL	8	97+	85	36	30,000	2700K dims to 1800K	390	50	12V	Low flicker <1% CE, UL, NOM	50
	MR16-12V-8W-FL-30KWDH-SL	8	97+	85	36	30,000	3000K dims to 1800K	427	55	12V	Low flicker <1% CE, UL, NOM	50
	MR16-12V-8W-NF-27KWDH-SL	8	97+	85	24	30,000	2700K dims to 1800K	410	53	12V	Low flicker <1% CE, UL, NOM	50
	MR16-12V-8W-NF-30KWDH-SL	8	97+	85	24	30,000	3000K dims to 1800K	450	58	12V	Low flicker <1% CE, UL, NOM	50

SORAA BRILLIANT HIGH LUMEN 2700K COLOR TEMPERATURE

Brand	Ordering Code	Watts	CRI	R9	Beam Angle (Degrees)	Lamp Life (Hours)	CBCP	Total Lumens	Lumens Per Watt	Voltage	Certification	Halogen Equivalent
SORAA Brilliant HL	SM16-07-10D-827-H1*	8	90	80	10	35,000	8,000	575	77	12V +/- 1.2V	Title 20 certification pending, UL/CUL Class 2 and non-Class 2, FCC Title 47 Part 15B, RoHS, CE	75
	SM16-07-25D-827-H1	8	90	80	25	35,000	3,710	600	80	12V +/- 1.2V	Title 20 certification pending, UL/CUL Class 2 and non-Class 2, FCC Title 47 Part 15B, RoHS, CE	75
	SM16-07-36D-827-H1	8	90	80	36	35,000	1,550	600	80	12V +/- 1.2V	Title 20 certification pending, UL/CUL Class 2 and non-Class 2, FCC Title 47 Part 15B, RoHS, CE	75

*Use with Snap Lens

SORAA VIVID 2700K COLOR TEMPERATURE INDOOR/OUTDOOR

Brand	Ordering Code	Watts	CRI	R9	Beam Angle (Degrees)	Lamp Life (Hours)	CCT Warm Dim	Total Lumens	Lumens Per Watt	Voltage	Certification	Halogen Equivalent
SORAA Vivid	SM16-07-10d-927-03*	8	95	95	10	35,000	5,710	390	52	12V +/- 1.2V	UL/CUL Class 2 and non-Class 2, FCC Title 47 Part 15B, RoHS, CE	50
	SM16-07-25D-927-03	8	95	95	25	35,000	2,260	410	55	12V +/- 1.2V	UL/CUL Class 2 and non-Class 2, FCC Title 47 Part 15B, RoHS, CE	50
	SM16-07-36D-927-03	8	95	95	36	35,000	1,070	410	55	12V +/- 1.2V	UL/CUL Class 2 and non-Class 2, FCC Title 47 Part 15B, RoHS, CE	50

*Use with Snap Lens

SORAA HEALTHY

Brand	Ordering Code	Watts	CRI	R9	Beam Angle (Degrees)	Lamp Life (Hours)	CCT Warm Dim	Total Lumens	Lumens Per Watt	Voltage	Certification	Halogen Equivalent
SORAA Vivid	SH-MR16-07-36D-27-01-X2	8	80	90	36	25,000	1,020	400	53	12V +/- 1.2V	UL/CUL, FCC Title 47 Part 15B, RoHS	50

SORAA BRILLIANT HIGH LUMEN 3000K COLOR TEMPERATURE

Brand	Ordering Code	Watts	CRI	R9	Beam Angle (Degrees)	Lamp Life (Hours)	CBCP	Total Lumens	Lumens Per Watt	Voltage	Certification	Halogen Equivalent
SORAA Brilliant HL	SM16-07-10D-830-H1*	8	90	80	10	35,000	8,400	600	80	12V +/- 1.2V	Title 20 certification pending, UL/CUL Class 2 and non-Class 2, FCC Title 47 Part 15B, RoHS, CE	75
	SM16-07-25D-830-H1	8	90	80	25	35,000	3,300	630	84	12V +/- 1.2V	Title 20 certification pending, UL/CUL Class 2 and non-Class 2, FCC Title 47 Part 15B, RoHS, CE	75
	SM16-07-36D-830-H1	8	90	80	36	35,000	1,650	630	84	12V +/- 1.2V	Title 20 certification pending, UL/CUL Class 2 and non-Class 2, FCC Title 47 Part 15B, RoHS, CE	75

*Use with Snap Lens

PROJECT		FIXTURE TYPE		DATE	

www.PureEdgeLighting.com | Phone: 773.770.1195 | 1718 W. Fullerton Ave. Chicago, IL 60614

PureEdge Lighting reserves the right to modify this specification without prior notice

12VAC LED MR16

SORAA VIVID 3000K COLOR TEMPERATURE MR16 INDOOR/OUTDOOR

Brand	Ordering Code	Watts	CRI	R9	Beam Angle (Degrees)	Lamp Life (Hours)	CCT Warm Dim	Total Lumens	Lumens Per Watt	Voltage	Certification	Halogen Equivalent
SORAA Vivid	SM16-07-10D-930-03*	8	95	95	10	35,000	6,000	410	55	12V +/- 1.2V	UL/CUL Class 2 and non-Class 2, FCC Title 47 Part 15B, RoHS, CE	50
	SM16-07-25D-930-03	8	95	95	25	35,000	2,400	435	58	12V +/- 1.2V	UL/CUL Class 2 and non-Class 2, FCC Title 47 Part 15B, RoHS, CE	50
	SM16-07-36D-930-03	8	95	95	36	35,000	1,130	435	58	12V +/- 1.2V	UL/CUL Class 2 and non-Class 2, FCC Title 47 Part 15B, RoHS, CE	50

*Use with Snap Lens

SORAA VIVID 4000K COLOR TEMPERATURE MR16 INDOOR/OUTDOOR

Brand	Ordering Code	Watts	CRI	R9	Beam Angle (Degrees)	Lamp Life (Hours)	CBCP	Total Lumens	Lumens Per Watt	Voltage	Certification	Halogen Equivalent
SORAA Vivid	SM16-07-10D-940-03*	8	95	95	10	35,000	6,290	430	57	12V +/- 1.2V	UL/CUL Class 2 and non-Class 2, FCC Title 47 Part 15B, RoHS, CE	50
	SM16-07-25D-940-03	8	95	95	25	35,000	2,510	455	61	12V +/- 1.2V	UL/CUL Class 2 and non-Class 2, FCC Title 47 Part 15B, RoHS, CE	50
	SM16-07-36D-940-03	8	95	95	36	35,000	1,190	455	61	12V +/- 1.2V	UL/CUL Class 2 and non-Class 2, FCC Title 47 Part 15B, RoHS, CE	50

*Use with Snap Lens

SATCO 3500K COLOR TEMPERATURE MR16 INDOOR/OUTDOOR

Brand	Ordering Code	Watts	CRI	R9	Beam Angle (Degrees)	Lamp Life (Hours)	CBCP	Total Lumens	Lumens Per Watt	Voltage	Certification	Halogen Equivalent
SATCO 3500K	S8637	8	90+	N/A	15	25,000	6,290	430	61	12	UL/CUL, FCC Title 47 Part 15B, RoHS, Lawful for sale in California	75
	S8642	8	90+	N/A	40	25,000	2,510	455	61	12	UL/CUL, FCC Title 47 Part 15B, RoHS, Lawful for sale in California	75

8MR16/LED/40'/35K/90CRI/12V 8 watt; LED MR16; 3500K; 40' beam spread; GU5.3 base; 12 volts. Features: Silver back MR16 reflector. Direct replacements for 75 watt Halogen lamps - uses only 8 watts. Dimmable. No UV or IR radiation. Approved for enclosed fixtures.

PROJECT		FIXTURE TYPE		DATE	

www.PureEdgeLighting.com | Phone: 773.770.1195 | 1718 W. Fullerton Ave. Chicago, IL 60614

PureEdge Lighting reserves the right to modify this specification without prior notice

SORAA VIVID MR16 36˚ FL
3000K | Rf: 90.4 | Rg: 99.5

Color Vector Graphic

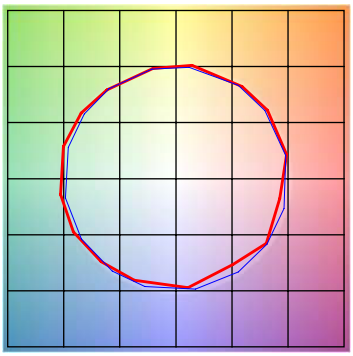

		GRAPHIC SHIFTS %	
HUE BIN	Rf	CHROMA	HUE
1	94.4	1.0%	0.8%
2	94.6	2.1%	-1.1%
3	91.9	1.1%	-3.3%
4	91.9	2.1%	-2.1%
5	93.9	0.4%	-0.9%
6	95.2	0%	1.9%
7	93.4	2.7%	-0.7%
8	92.7	4.2%	0.1%
9	90.5	3.6%	-3.9%
10	84.3	2.3%	-9.2%
11	81.3	2.3%	-12.7%
12	81.3	-3.6%	-10.3%
13	90.5	-2.5%	-6.2%
14	88.5	-8.2%	-0.4%
15	96.2	-1.0%	0.3%
16	86.6	-5.4%	8.2%

Test Reference

SOL-LIGHT WARM DIM MR16 36˚ FL
3000K | Rf: 94.2 | Rg: 101.2

Color Vector Graphic

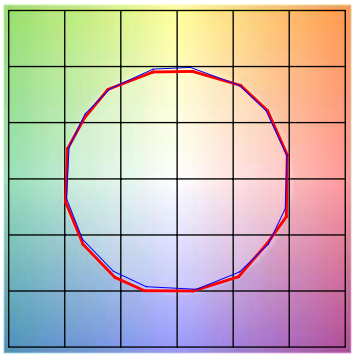

		GRAPHIC SHIFTS %	
HUE BIN	Rf	CHROMA	HUE
1	96.0	0.3%	0.7%
2	96.8	0.9%	-0.8%
3	95.6	0.5%	-0.8%
4	93.1	-3.2%	-2.7%
5	95.7	-2.4%	0.4%
6	96.8	0.4%	1.6%
7	92.4	-1.4%	3.5%
8	96.8	1.2%	1.2%
9	94.0	1.4%	3.1%
10	92.6	2.1%	3.9%
11	92.2	3.7%	3.9%
12	92.4	3.9%	-0.9%
13	94.7	0.9%	-3.3%
14	93.4	3.0%	-3.2%
15	93.6	-1.1%	0.9%
16	90.2	2.4%	-6.7%

Test Reference

SORAA VIVID MR16 24˚ NF
3000K | Rf: 94.0 | Rg: 101.0

Color Vector Graphic

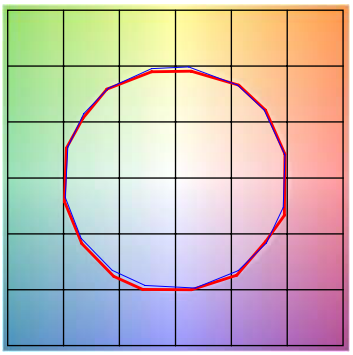

		GRAPHIC SHIFTS %	
HUE BIN	Rf	CHROMA	HUE
1	95.9	0.3%	0.8%
2	96.8	0.8%	-0.9%
3	95.5	0.4%	-0.9%
4	92.7	-3.4%	-2.9%
5	95.6	-2.7%	0.4%
6	96.8	0.1%	1.6%
7	92.2	-1.6%	3.7%
8	96.6	1.1%	1.5%
9	93.7	1.4%	3.3%
10	92.4	2.2%	4.1%
11	92.2	3.8%	3.8%
12	92.4	3.9%	-1.1%
13	94.4	0.8%	-3.6%
14	93.3	2.8%	-3.4%
15	93.4	-1.4%	0.9%
16	90.3	2.2%	-6.7%

Test Reference

SOL-LIGHT WARM DIM MR16 24˚ NF
3000K | Rf: 94.2 | Rg: 101.2

Color Vector Graphic

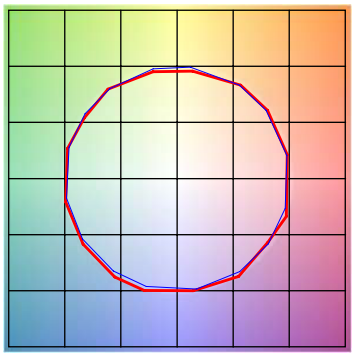

		GRAPHIC SHIFTS %	
HUE BIN	Rf	CHROMA	HUE
1	95.9	0.3%	0.8%
2	96.8	0.8%	-0.9%
3	95.5	0.4%	-0.9%
4	92.7	-3.4%	-2.9%
5	95.6	-2.7%	0.4%
6	96.8	0.1%	1.6%
7	92.2	-1.6%	3.7%
8	96.6	1.1%	1.5%
9	93.7	1.4%	3.3%
10	92.4	2.2%	4.1%
11	92.2	3.8%	3.8%
12	92.4	3.9%	-1.1%
13	94.4	0.8%	-3.6%
14	93.3	2.8%	-3.4%
15	93.4	-1.4%	0.9%
16	90.3	2.2%	-6.7%

Test Reference

PROJECT		FIXTURE TYPE		DATE	

PureEdge Lighting reserves the right to modify this specification without prior notice