TS24M MAGNETIC TRACK

24VDC REMOTE POWER, TWO-CIRCUIT, SURFACE OR SUSPENDED TRACK SYSTEM

DESIGNED BY GREGORY KAY | ASSEMBLED IN AMERICA

REV 12.09.25

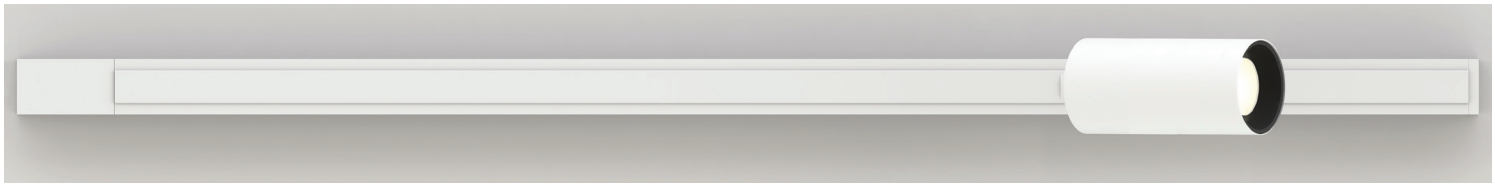

DESCRIPTION

TS24M Magnetic Track by PureEdge Lighting is a two-circuit, 24VDC track system allowing for two groups of fixtures to be controlled independently. This system can be surface mounted or suspended from a stem at various drops, with slope ceiling adapter options for ceilings up to 60˚. The channels are offered in multiple lengths that can be further cut to size in the field. End and Center power feeds, L, T, and X power connectors provide more flexibility to make turns and create different configurations along the ceiling. Magnetic Track Heads easily click into place, offered in five color temperatures, including Warm Dim (**30D**), and a variety of different features, including adjustable beam spreads and an asymmetric optic for wall wash applications. 24VDC remote power supplies are required and sold separately. For custom designs, quotes, and layout assistance, email our design team: design@PureEdgeLighting.com.

FEATURES

- Two-circuit system allows for independent switching and dimming of the two zones
- Magnetic track heads simply click into the track and allow you to easily adjust the fixture direction, tilt and rotation with one hand for easy installation and flexibility while on a ladder
- Designed for use with 24VDC Universal Remote Power Supplies up to 40' away
- Magnetic Track Heads are available in five color temperatures including Warm Dim (**30D**)
- Track Head Lumen Output up to 1256 Lumens with multiple fixed and adjustable beam spread and wall wash options
- Designer-grade Color Rendering up to 95 CRI
- Power Feeds offered in End, Center, L, T and X shapes, up to two 200 watts per circuit before re-feeding, and 800 watts total (4 x 200W) with center feed.
- TS24M Track is available in 2', 4', 6' and 8' lengths can be field-cut
- Stem Lengths are offered in various increments from 4" to 48"
- White, paint-able plastic covers are included to conceal track slots for a seamless look

FINISH & MATERIAL

- White or Black Powder Coat
- Extruded Aluminum Channel with #10 Gauge copper busbar conductors

TRACK HEADS

- Static White Color Temperatures: 24K, 27K, 30K, 35K
- Warm Dim: 30D (3000K-1800K)
- Rated for 50,000 hours with L70 (70% lumen maintenance)

POWER SUPPLY AND DIMMING (SOLD SEPARATELY)

24VDC, Class 2 wiring

- Uni Power Supply Universal Dimming (**TRIAC, ELV, 0-10V**)
  ELV & TRIAC Smart Dimmer & Switch

APPLICATIONS

Indoor use only. Ideal applications in residential, commercial, retail and hospitality environments.

WARRANTY / LABELS

5 year warranty. Assembled in America
ETL (Conforms to UL 1598 and CSA 22.2 #250.0), Class 2 Under 100 Watts, 200 Watt UL2108

PROJECT		FIXTURE TYPE		DATE	

TS24M MAGNETIC TRACK

24VDC REMOTE POWER, TWO-CIRCUIT, SURFACE OR SUSPENDED TRACK SYSTEM

REV 12.09.25

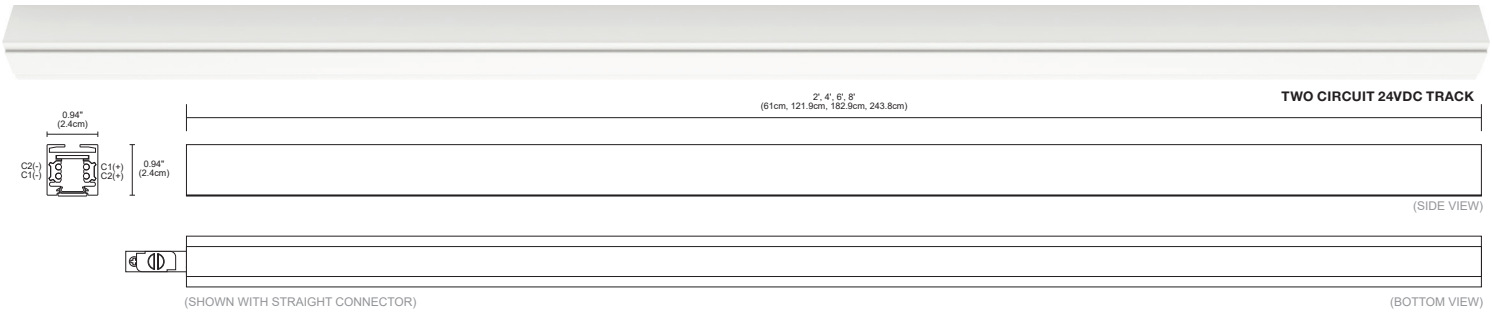

TWO CIRCUIT MAGNETIC TRACK

Made of extruded aluminum, each channel contains four #10 Gauge round copper busbar eliminating voltage drop. 24VDC Remote power supplies are required and sold separately. Includes opaque slot covers, two end caps, straight connector, anchors, and screws.

System		Circuit		Length in Feet		Finish
TS24M	–	2C	–	8FT	–	WH

TS24M Track Surface Mount 24VDC

2C Two Circuit

2FT 2'
4FT 4'
6FT 6'
8FT 8'

BK Black Powder Paint
WH Warm White Powder Coat RAL 9010

OPAQUE SLOT COVER (INCLUDED)

One Opaque Slot Cover is included with each Track.

System		Type		Length in Feet		Finish
TS24M	–	SCO	–	8FT	–	WH

TS24M Track Surface Mount 24VDC

SCO Opaque Cover for Track Slot

8FT 8'

BK Black
WH Warm White Powder Coat RAL 9010

COMPONENTS Power Feeds

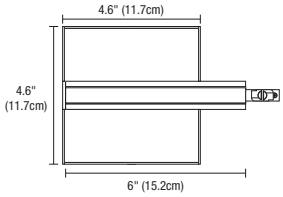

END POWER FEED

System		Type		Finish
TS24M	– 2C –	EP	–	WH

TS24M Track Surface Mount 24VDC

2C Two Circuit

EP End Power Feed, up to 2x200 Watts

BK Black
WH Warm White Powder Coat RAL 9010

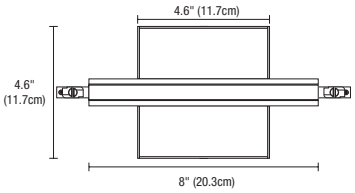

CENTER POWER FEED

Center Power Feed joins two sections of track in both directions, up to four power supplies, 200 watts each. May be wired as a dual or single feed. 4" square canopy.

System		Type		Finish
TS24M	– 2C –	CP	–	WH

TS24M Track Surface Mount 24VDC

2C Two Circuit

CP Center power feed, up to 4x200 Watt power supplies

BK Black
WH Warm White Powder Coat RAL 9010

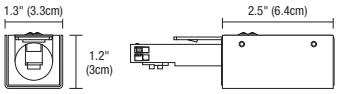

END POWER CONDUIT FEED

System		Type		Canopy		Finish
TS24M	– 2C –	EP	–	CON	–	WH

TS24M Track Surface Mount 24VDC

2C Two Circuit

EP End Power Feed, Two Circuit, up to 2x200 Watts

CON 1/2" Conduit Feed Connector

BK Black
WH Warm White Powder Coat RAL 9010

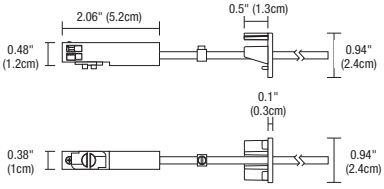

PLENUM RATED END POWER FEED

4' of #14 Gauge Plenum rated cable. T-Bar compatible.

System		Type		Canopy		Finish
TS24M	– 2C –	EP	–	4FTC	–	WH

TS24M Track Surface Mount 24VDC

2C Two Circuit

EP End Power Feed, Two Circuit, up to 2x200 Watts

4FTC 4' of Plenum Rated Cable

BK Black
WH Warm White Powder Coat RAL 9010

PROJECT	1.3" (3.3cm) 1.3" (3.3cm) 1.3" (3.3cm) 1.3" (3.3cm)	FIXTURE TYPE		DATE	

TS24M MAGNETIC TRACK

24VDC REMOTE POWER, TWO-CIRCUIT, SURFACE OR SUSPENDED TRACK SYSTEM

REV 12.09.25

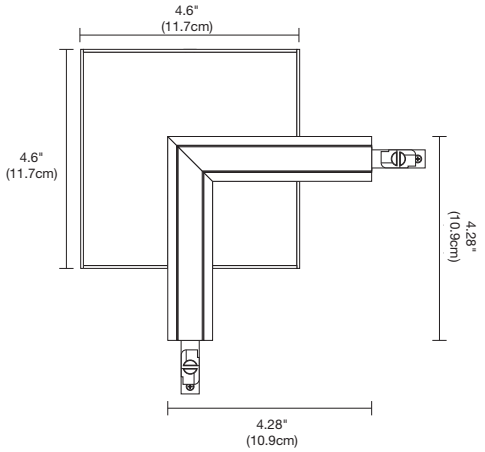

L-SHAPED POWER FEED

L-Shaped power feed joins two sections of track at 90°. L-Power feeds include channel starters, slot covers, two power feed adapters, canopy with octopus junction box attachment, and two channel connectors (conductive or non-conductive depending on ordering code). The **LPL** and **LPR** will have one conductive and one non conductive channel connector. **LP** May be wired with two power supplies for each zone, or as a dual power feed with four power supplies for two zones in each direction. 4" square canopy.

System		Type		Finish
TS24M –	**2C** –	**LP**	–	**WH**
TS24M Track Surface Mount 24VDC	**2C** Two Circuit	**LP** L-Shaped Power Feed, both Directions, up to 4 power supplies, 200 watts each **LPL** L-Shaped Power Feed, Left Power Only, 2x 200 Watts **LPR** L-Shaped Power Feed, Right Power Only, 2x 200 Watts		**BK** Black **WH** Warm White Powder Coat RAL 9010

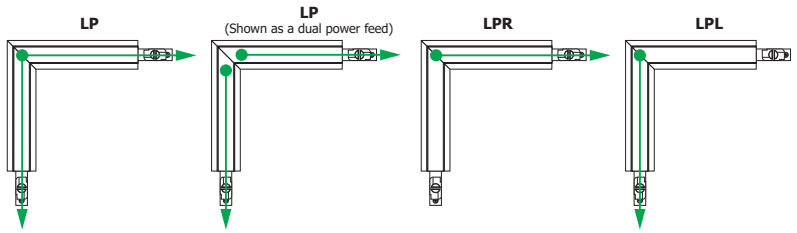

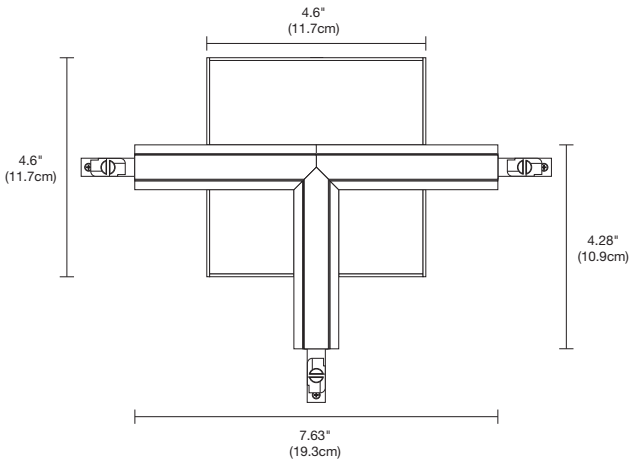

T-SHAPED POWER FEED

T-Shaped power feed joins three sections of track 90° apart. Includes channel starter, three power feed connectors, slot covers, canopy with octopus junction box attachment, three conductive channel connectors, and two non-conductive channel connectors. The T-shaped power feed may be configured several different ways such as; **TPS**, **TPL**, **TPR**, **TPBL**, or **TPBR** see configuration drawings below. 4" square canopy.

System		Type		Finish
TS24M –	**2C** –	**TP**	–	**WH**
TS24M Track Surface Mount 24VDC	**2C** Two Circuit	**TP** T-Shaped Power Connector, Conductive on 3 Sections up to 6 x 200 watts power supplies **TPS** T-Shaped Connector, Conductive through Left & Right Sections **TPL** T-Shaped Power Connector, Conductive on Left Sections **TPR** T-Shaped Power Connector, Conductive on Right Sections **TPBL** T-Shaped Power Connector, Conductive on Base & Left Sections **TPBR** T-Shaped Power Connector, Conductive on Base & Right Sections		**BK** Black **WH** Warm White Powder Coat RAL 9010

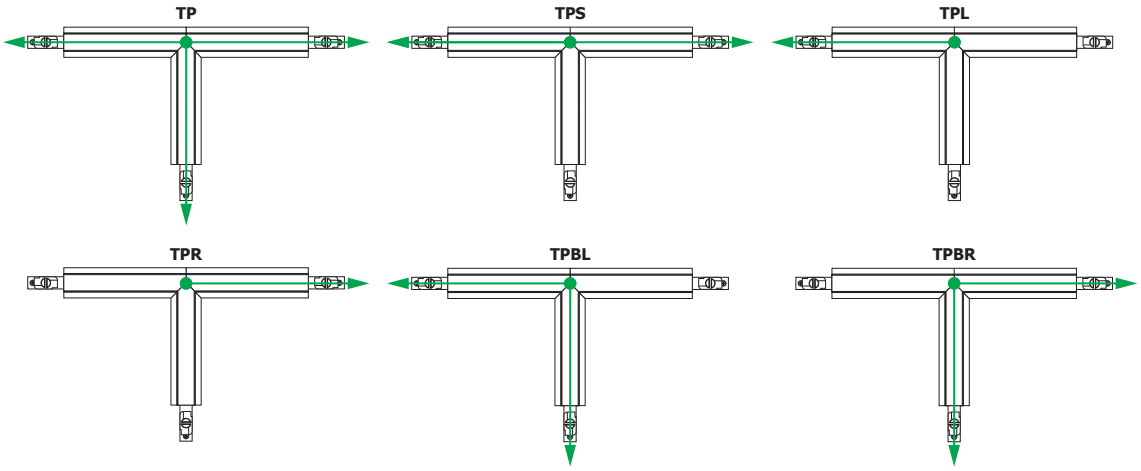

PROJECT		FIXTURE TYPE		DATE	

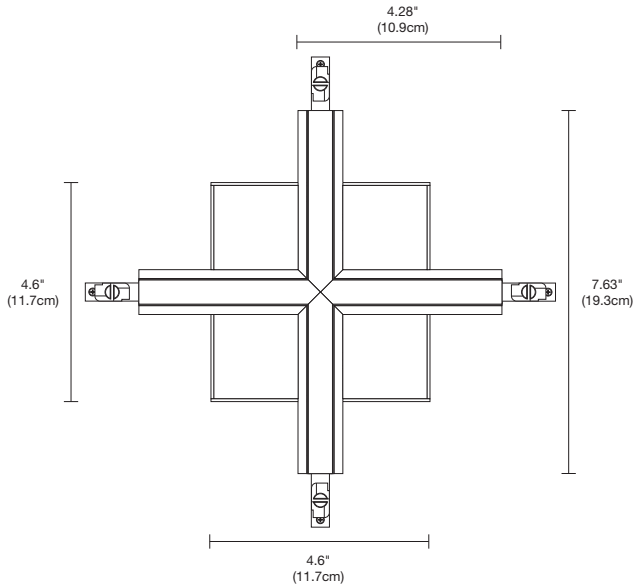

X-SHAPED POWER FEED

X-Shaped power feed joins four sections of track at 90°. Includes channel starter, four power feed connectors, slot covers, canopy with junction box attachment, four conductive channel connectors, and three non-conductive channel connectors. The X-shaped power feed may be configured several different ways such as; **XP**, **XP1**, **XPS**, **XP90**, and **XPT**.

System		Type		Finish
TS24M	– **2C**	– **XP**		– **WH**

TS24M Track Surface Mount 24VDC

2C Two Circuit

XP X-Shaped Power Connector, Conductive on 4 Sections up to 8 x 200 watts power supplies

XP1 X-Shaped Power Connector, Conductive on 1 Section

XPS X-Shaped Power Connector, Conductive Straight through 2 Sections

XP90 X-Shaped Power Connector, Conductive on 2 Sections, 90° Turn

XPT X-Shaped Power Connector, Conductive on 3 Sections

BK Black

WH Warm White Powder Coat RAL 9010

XP

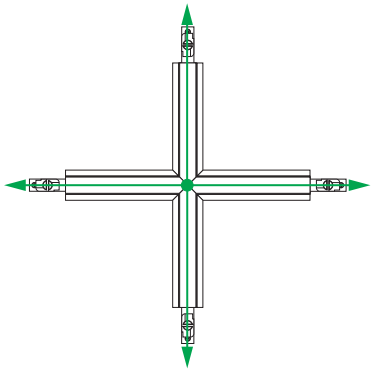

XP1

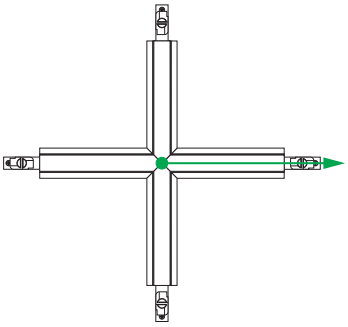

XPS

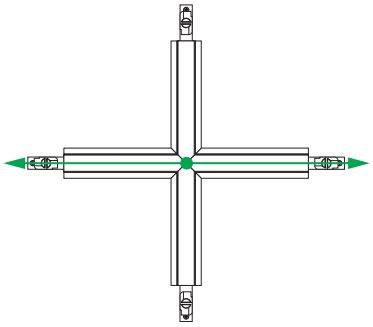

XP90

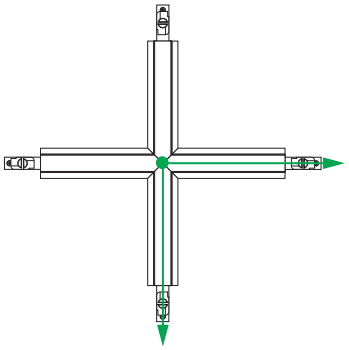

XPT

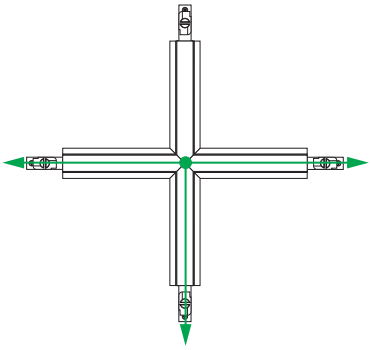

PROJECT		FIXTURE TYPE		DATE	

TS24M MAGNETIC TRACK

24VDC REMOTE POWER, TWO-CIRCUIT, SURFACE OR SUSPENDED TRACK SYSTEM

REV 12.09.25

COMPONENTS Connectors, End Caps, & Mounting Clips

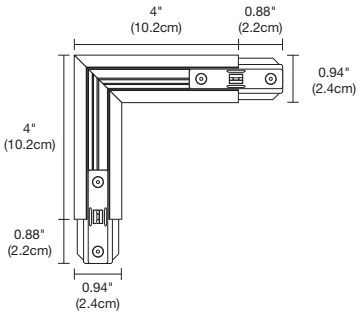

L-CONNECTOR

L-Shaped Connector joins two sections of track 90° apart, conducting the power **"LC"** or isolating the power **"LNC"**. Order Non-Conductive when adding two power supplies to form a square configuration.

System		Type		Type		Finish
TS24M	–	**2C**	–	**LC**	–	**WH**
TS24M Track Surface Mount 24VDC		**2C** Two Circuit		**LC** L-Connector Conductive **LNC** L-Connector Non-Conductive		**BK** Black **WH** Warm White Powder Coat RAL 9010

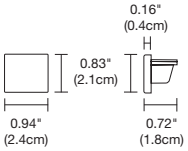

END CAP

End Caps are included with lengths of track channel (2 End Caps with every piece of track. Additional End Caps are available for replacement if needed.

System		Type		Fixture		Finish
TS24M	–	**2C**	–	**CA**	–	**WH**
TS24M Track Surface Mount 24VDC		**2C** Two Circuit		**CA** End Cap		**BK** Black **WH** Warm White Powder Coat RAL 9010

STEM MOUNT Components

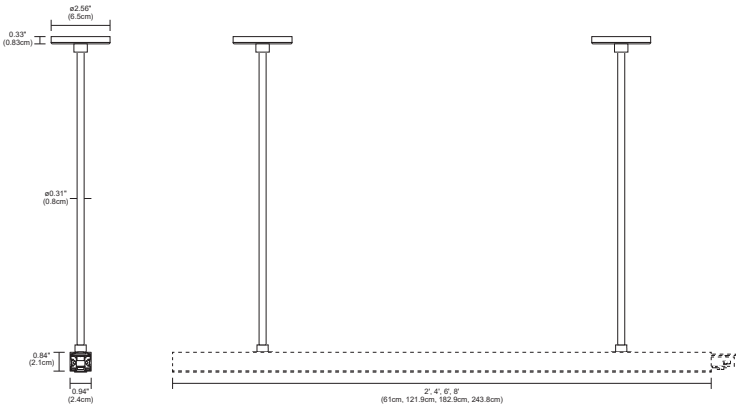

SUPPORT STEM

The TS24M Stem Mount allows the TS24M track system to be suspended from a ceiling. Available in sizes from 4" to 48". 4" Round Canopy or 2" Round canopy. Custom sizes are available upon request. Stems are recommended to be placed every 4 feet.

System		Suspension Type		Canopy		Stem Length		Finish
TS24	–	**STM**	–	**2R**	–	**36**	–	**WH**
TS24 Track Surface Mount 24VDC		**STM** Stem Mount **SLC** Slop Ceiling Adapter		**2R** 2" Round Canopy **4R** 4" Round Canopy		**4** 4" **6** 6" **12** 12" **14** 14" **18** 18" **24** 24" **30** 30" **36** 36" **48** 48"		**BK** Black **WH** Warm White Powder Coat RAL 9010

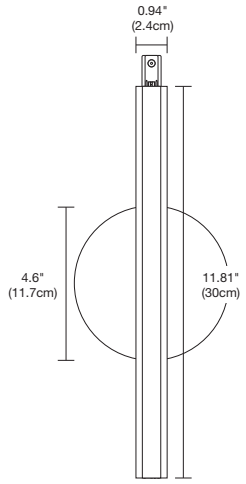

STEM CENTER POWER FEED

The TS24M Stem Center Power Feed allows the TS24M track to be suspended and powered from a ceiling up to 40' away, with remote power supply. Stem lengths are available from 4" to 48", offered with a 4.6" round canopy that fits on a standard junction box or a 2.6" round canopy for new construction supplied with a 2" junction box plaster ring. Custom sizes are available upon request. May be wired as a dual or single feed. 2" or 4" round canopy

System		Suspension Type		Type		Type		Canopy		Stem Length		Finish
TS24M	–	**STM**	–	**2C**	–	**CP**	–	**2R**	–	**36**	–	**WH**
TS24M Track Surface Mount 24VDC		**STM** Stem Mount **SLC** Slop Ceiling Adapter		**2C** Two Circuit		**CP** Center Feed Power		**2R** 2" Round Canopy **4R** 4" Round Canopy		**4** 4" **6** 6" **12** 12" **14** 14" **18** 18" **24** 24" **30** 30" **36** 36" **48** 48"		**BK** Black **WH** Warm White Powder Coat RAL 9010

PROJECT		FIXTURE TYPE		DATE	

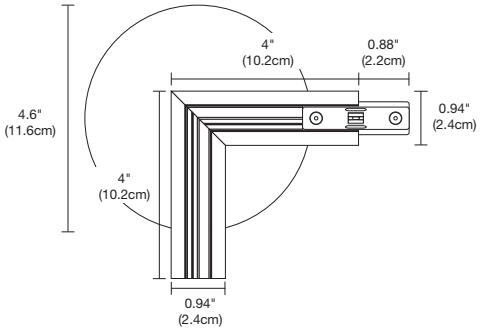

STEM L-SHAPED POWER FEED

The TS24M L power feed stem mount allows the track to be suspended and powered from a ceiling up to 40' away, with remote power supply. L-Shaped Power Feed joins two sections of track at 90°. L-Power Feeds includes; 4" L shaped channel starters, stem, channel covers, two power feed adapter for two circuit each, canopy with jbox attachment, and two channel connectors (conductive or non-conductive depending on ordering code). May be wired as an L-Power with 2 transformers for each zone or as a dual with four transformers for 2 zones in each direction. The **LPL** and **LPR** will have one conductive and one non conductive channel connector. 2" or 4" round canopy

System		Suspension Type		Type		Type		Canopy		Stem Length		Finish
TS24M	–	**STM**	–	**2C**	–	**LP**	–	**2R**	–	**36**	–	**WH**

TS24M Track Surface Mount 24VDC

STM Stem Mount
SLC Slop Ceiling Adapter

2C Two Circuit

LP L-Shaped Power Feed, up to 4x 200 Watts
LPL L-Shaped Power Feed, Left Power Only, 2x 200 Watts
LPR L shaped Power Feed, Right Power Only, 2x 200 Watts

2R 2" Round Canopy
4R 4" Round Canopy

4 4"
6 6"
12 12"
14 14"
18 18"
24 24"
30 30"
36 36"
48 48"

BK Black
WH Warm White Powder Coat RAL 9010

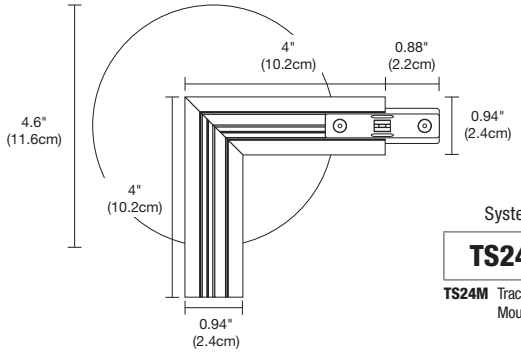

STEM L-SHAPED CONNECTOR

Stem L-Shaped Connector joins two sections of track 90° apart, conducting the power **"LC"** or isolating the power **"LNC"**. 2" or 4" round canopy

System		Suspension Type		Type		Type		Canopy		Stem Length		Finish
TS24M	–	**STM**	–	**2C**	–	**LC**	–	**2R**	–	**36**	–	**WH**

TS24M Track Surface Mount 24VDC

STM Stem Mount
SLC Slop Ceiling Adapter

2C Two Circuit

LC Conductive Connector
LNC Non-Conductive Connector

2R 2" Round Canopy
4R 4" Round Canopy

4 4"
6 6"
12 12"
14 14"
18 18"
24 24"
30 30"
36 36"
48 48"

BK Black
WH Warm White Powder Coat RAL 9010

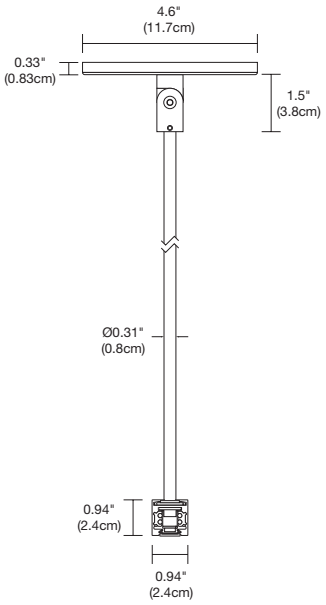

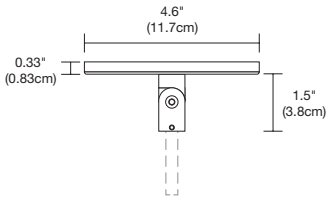

ADDITIONAL SLOPE CEILING ADAPTER

Slope ceiling adapter for 2" or 4" round canopy. Can accommodate sloped ceilings up to 60˚.

System		Suspension Type		Canopy		Finish
TS24	–	**SLC**	–	**2R**	–	**WH**

TS24 Track Surface Mount 24VDC

SLC Slop Ceiling Adapter

2R 2" Round Canopy
4R 4" Round Canopy

BK Black
WH Warm White Powder Coat RAL 9010

PROJECT		FIXTURE TYPE		DATE	

TS24M MAGNETIC TRACK

24VDC REMOTE POWER, TWO-CIRCUIT, SURFACE OR SUSPENDED TRACK SYSTEM

REV 12.09.25

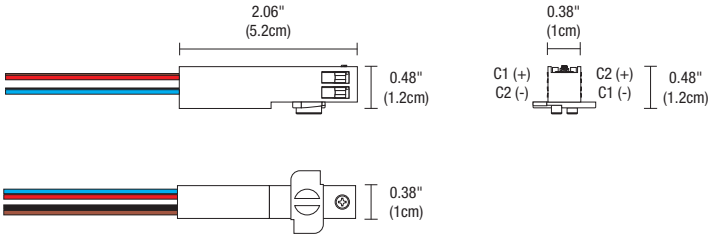

POWER FEED CONNECTOR

Included with all Power Feeds. Additional Power Feed Connectors for replacement only.

System		Circuit		Type
T24M	–	2C	–	P
T24M Track Magnetic 24VDC		**2C** Two Circuit		**P** Power Feed and Track Connector

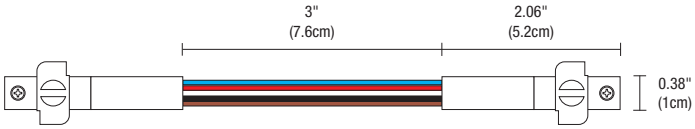

POWER JUMPER

Included with each conductive connector for connecting two sections of track.

System		Circuit		Connector
T24M	–	2C	–	JC
T24M Track Magnetic 24VDC		**2C** Two Circuit		**JC** Jumper Connector

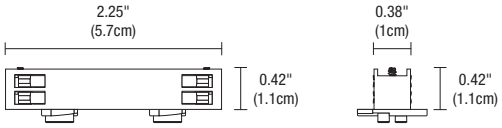

Straight Connector Conductive

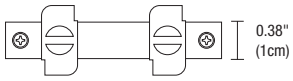

Straight Connector Non-Conductive

STRAIGHT CONNECTOR

Straight Connector joins two track sections end to end and is concealed by the slot covers. Required for connecting two sets of track.

System		Circuit		Type
T24M	–	2C	–	SC
T24M Track Magnetic 24VDC		**2C** Two Circuit		**SC** Straight Connector Conductive **SNC** Straight Connector Non-Conductive

INCLUDED WITH TRACK HEADS

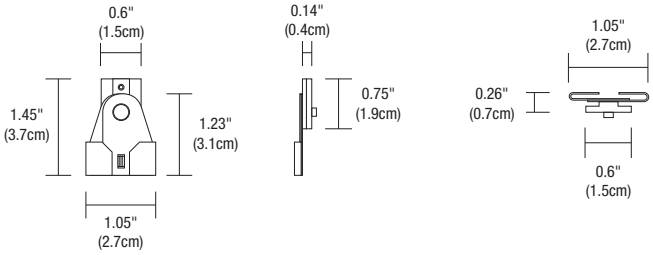

TRACK T-BAR CEILING MOUNTING CLIP (FOR 1" WIDE T-BAR)

Order 1 for every 2ft of track.

System		Type		Ceiling		Finish
T24	–	MCL	–	TB1	–	WH
T24 Track 24VDC		**MCL** Mounting Clip		**TB1** 1" Wide T-Bar		**WH** White **BK** Warm White Powder Coat RAL 9010

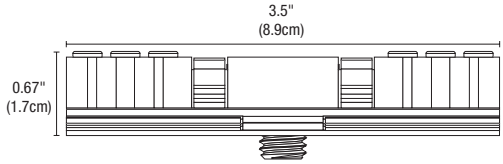

System		Circuit		Connector		Finish
T24M	–	2C	–	FJR	–	WH
T24M Track Magnetic 24VDC		**2C** Two Circuit		**FJR** Fast Jack Connector		**BK** Black **WH** Warm White Powder Coat RAL 9010

PROJECT		FIXTURE TYPE		DATE	

T24M TRACK HEADS, 2 CIRCUIT MAGNETIC

24VDC WITH INTEGRATED LED

REV 12.09.25

PureEdge T24M Track Luminaires are compatible with TruTrack® Trim (**TTR24M-2C**) and Surface Mount Magnetic track (**TS24M-2C**).

Linea by PureEdge Lighting is a low-profile linear luminaire engineered for our 2-Circuit Magnetic plaster-in systems, delivering clean lines and precise illumination. Integrated into a fully Low Voltage 24VDC system, delivering exceptional light output, color rending and efficiency. Available in 2W and 5W per foot, and in multiple color temperatures including Warm Dim (30D), Linea is suited for a wide range of residential, retail, hospitality, and commercial applications.

LINEA TRACK LUMINAIRE

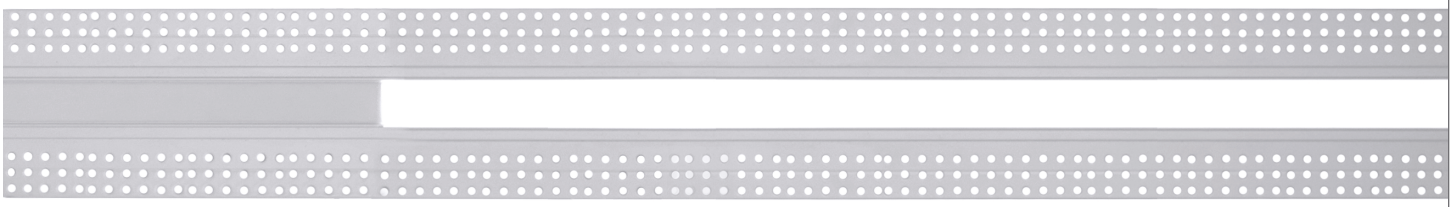

Linea Fixture with Plaster-in Detail

Recessed Linea Fixture

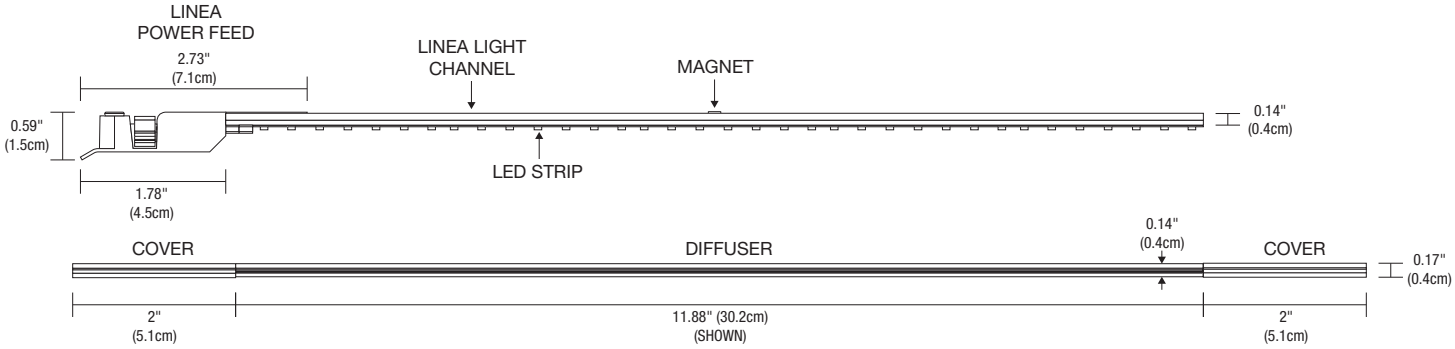

FINISHES

Black
BK

White
RAL 9010
WH

SURFACE TRACK MAGNETIC 2-CIRCUIT

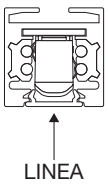

TRUTRACK MAGNETIC 2-CIRCUIT

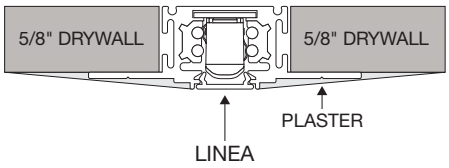

BEAM ANGLE REFERENCE 45°									
WATTS PER FOOT	**2.5W**				**4.4W**				
COLOR TEMPERATURE	24K	27K	30K	35K	24K	27K	30K	30D*	35K
LUMENS PER FOOT (lm/ft)	100	101	105	120	184	186	194	221	222
LUMENS PER WATT (lm/w)	40	40	42	48	42	42	44	46	51
CRI	92+	92+	92+	92+	92+	92+	92+	94+	92+

*30D - Warm Dim (4.8 Watts)

System		Type		Fixture		Wattage		Length In Feet		Color Temperature		Finish
T24M	–	**2C**	–	**LTL**	–	**5W**	–	**4FT**	–	**30D**	–	**BK**

T24M Track Head 24V Magnetic Connector

2C 2 Circuit

LTL Linea Track Luminaire

2W 2.5 Watts
5W 4.4 Watts
*Warm Dim 4.8W

1-8' Order in 1' increments

24K 2400K Very Warm White
27K 2700K Incandescent White
30K 3000K Warm White
30D 3000D Warm Dim (5W Only)
35K 3500K Neutral White

BK Black Powder Coat
WH Warm White Powder Coat RAL 9010

PROJECT		FIXTURE TYPE		DATE	

T24M TRACK HEADS, 2 CIRCUIT MAGNETIC

24VDC WITH INTEGRATED LED

REV 12.09.25

PureEdge T24M Track Heads are Compatible with Surface/Suspended Magnetic track (TS24M-2C) and TruTrack® Trim (TTR24M).
All uniform beam spread options are field changeable. See accessories page for more information.

Pure Smart™ TruColor™ RGBTW

TUBO LARGE SMART TRACK HEAD	TUBO LARGE WALL WASH SMART TRACK HEAD
12 WATTS / 17 WATTS	12 WATTS / 17 WATTS

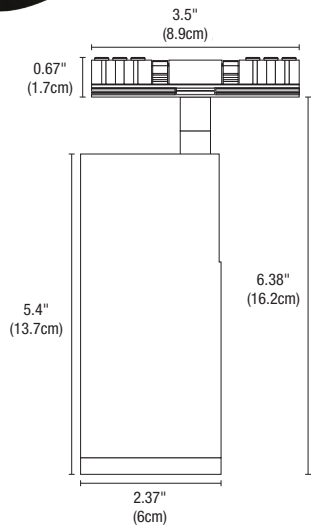

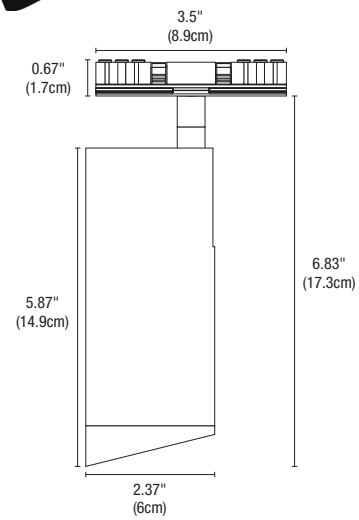

System	Type	Fixture	Wattage	Beam Spread Lens	Control	Color Temperature	Finish
T24M	**2C**	**TU2L**	**12W**	**NF**	**WZ**	**TC**	**BK**
T24M Track Head 24V Magnetic Connector	**2C** 2 Circuit	**TU2L** Tubo Large 2	**12W** 12 Watts **17W** 17 Watts* *Not available for WH Finish	**SP*** Spot 16° **NF** Narrow Flood 30° **FL*** Flood 35° **WF** Wide Flood 45° **WW** Wall Wash *Has Aura Effect without diffusion film	**WZ** WiZ Smart Control	**TC** TruColor™ RGBTW Red, Green, Blue & Tunable White 1500K- 6500K	**BK** Black Powder Coat **WH** Warm White Powder Coat RAL 9010

WATTS	**12W**									**17W**								
COLOR TEMPERATURE	20K	22K	24K	27K	30K	35K	40K	57K	65K	20K	22K	24K	27K	30K	35K	40K	57K	65K
LUMENS	445	462	507	596	670	737	751	596	494	830	862	962	1130	1271	1401	1531	1307	1082
LUMENS PER WATT (lm/w)	44	44	47	52	56	61	64	60	56	64	62	65	72	79	87	96	93	82
CRI	86.7	88.3	89.7	93.2	95.2	96.8	96.7	93.9	91.6	86.4	88.4	91.8	94.7	95.9	97.3	96.5	94.8	93.3
Duv	-0.0027	-0.0011	-0.0019	-0.0022	-0.0023	-0.0005	-0.0005	-0.0041	-0.0036	0.0026	0.0026	0.0026	0.0033	0.0037	0.0024	0.0008	0.0024	0.0006
Rf	87	88	90	93	94	94	93	93	91	88	89	92	94	95	95	94	93	92
Rg	104	101	103	103	103	101	100	105	106	105	105	105	104	104	103	100	105	105
R9	91	92	90	94	97	98	94	80	66	84	86	92	97	97	98	85	90	83
R13	83	85	87	91	93	96	96	93	92	82	85	89	93	94	96	99	96	96
R15	92	93	93	95	96	97	95	91	88	90	91	93	96	96	97	96	94	93
WATTS	10	11	11	12	12	12	12	10	9	13	14	15	16	16	16	16	14	13

PROJECT		FIXTURE TYPE		DATE	

T24M TRACK HEADS, 2 CIRCUIT MAGNETIC

24VDC WITH INTEGRATED LED

REV 12.09.25

PureEdge T24M Track Heads are Compatible with Surface/Suspended Magnetic track (TS24M-2C) and TruTrack® Trim (TTR24M).
All uniform beam spread options are field changeable. See accessories page for more information.

TUBO LARGE | TUBO LARGE DOWNLIGHT

14 WATTS

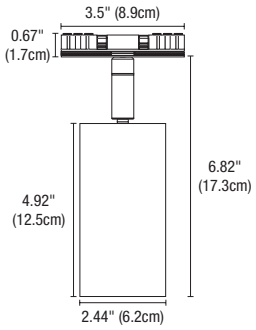

Drawing for dimensional purposes only, do not force head into vertical position, specify Tubo Downlight instead.

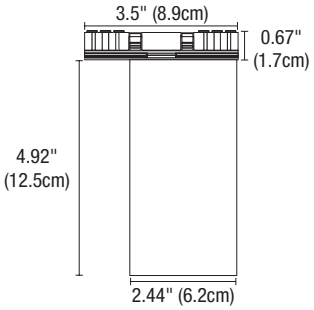

System		Type		Fixture		Beam Spread		Color Temperature		Finish
T24M	–	**2C**	–	**TUBL**	–	**FL**	–	**30K**	–	**WH**

T24M Track Head 24V Magnetic Connector

2C 2 Circuit

TUBL Tubo Large
TUBLD Tubo Large Downlight

NS* Narrow Spot 10°
SP Spot 20°
NF Narrow Flood 35°
FL Flood 45°
WF Wide Flood 60°
For 7° use STB16 snoot with NS

24K 2400K Very Warm White
27K 2700K Incandescent White
30K 3000K Warm White
30D 3000D Warm Dim
35K 3500K Neutral White
30D NS: 7.5W 400 lumens

BK Black Powder Coat
WH Warm White Powder Coat RAL 9010

	BEAM ANGLE REFERENCE 45°				
COLOR TEMPERATURE	24K	27K	30K	30D	35K
TOTAL LUMENS	1238	1035	1069	683	1268
WATTS	14	14	14	14	14
LUMENS PER WATT (lm/w)	88	74	76	49	91
CRI	97	92	91	97	98
TM-30 DATA	R9: 60 Rf: 93 Rg: 98	R9: 97 Rf: 92 Rg: 100	R9: 64 Rf: 91 Rg: 98	R9: 90 Rf: 95 Rg:102	R9: 92 Rf: 94 Rg:101

TUBO SMALL | TUBO SMALL DOWNLIGHT

9 WATTS (WARM DIM: 8 WATTS)

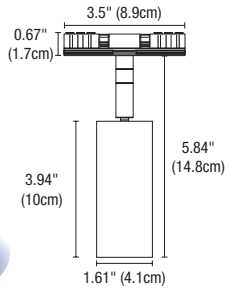

SNOOT DETAIL

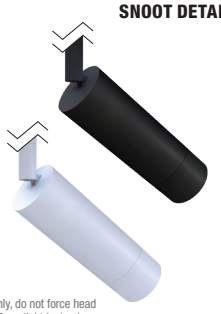

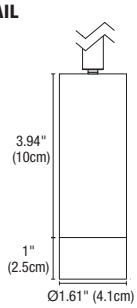

Drawings for dimensional purposes only, do not force head into vertical position, specify Tubo Downlight instead.

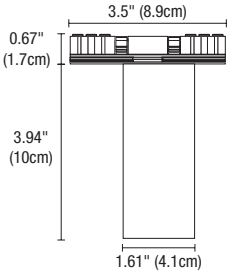

System		Type		Fixture		Beam Spread		Color Temperature		Finish
T24M	–	**2C**	–	**TUBS**	–	**FL**	–	**30K**	–	**WH**

T24M Track Head 24V Magnetic Connector

2C 2 Circuit

TUBS Tubo Small
TUBSD Tubo Small Downlight

NS* Narrow Spot 15°
SP Spot 25°
NF Narrow Flood 35°
FL Flood 45°
WF Wide Flood 60°
*NS with 30D Warm Dim uses snoot

24K 2400K Very Warm White
27K 2700K Incandescent White
30K 3000K Warm White
30D 3000D Warm Dim
35K 3500K Neutral White

BK Black Powder Coat
WH Warm White Powder Coat RAL 9010

	BEAM ANGLE REFERENCE 45°				
COLOR TEMPERATURE	24K	27K	30K	30D	35K
TOTAL LUMENS	503	420	434	287	515
WATTS	9	9	9	8	9
LUMENS PER WATT (lm/w)	59	49	51	39	61
CRI	97	92	93	94	98
TM-30 DATA	R9: 60 Rf: 93 Rg: 98	R9: 97 Rf: 92 Rg: 100	R9: 64 Rf: 91 Rg: 98	R9: 90 Rf: 95 Rg:102	R9: 92 Rf: 94 Rg:101

PROJECT		FIXTURE TYPE		DATE	

T24M TRACK HEADS, 2 CIRCUIT MAGNETIC

24VDC WITH INTEGRATED LED

REV 12.09.25

TUBO LARGE WALL WASH

15 WATTS

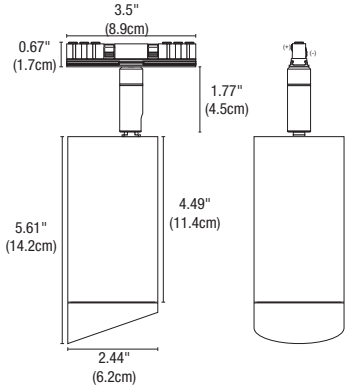

System		Type		Fixture		Beam Spread		Color Temperature		Finish
T24M	–	2C	–	TUBL	–	WW	–	30K	–	BK

T24M Track Head 24V Magnetic Connector

2C 2 Circuit

TUBL Tubo Large

WW Wall Wash

24K 2400K Very Warm White
27K 2700K Incandescent White
30K 3000K Warm White
30D 3000K Warm Dim to 1800K
35K 3500K Neutral White

BK Black Powder Coat
WH Warm White Powder Coat RAL 9010

TUBO WALL WASH	
COLOR TEMPERATURE	30K
TOTAL LUMENS	884
WATTS	15
LUMENS PER WATT (lm/w)	59
CRI	92
TM-30 DATA	R9: 61.2 Rf: 92 Rg: 100

ZOOM

16 WATTS

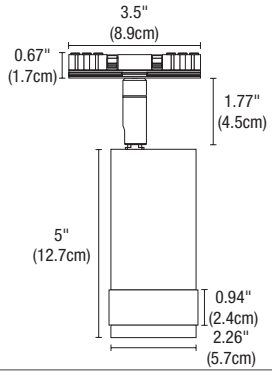

System		Type		Fixture		Beam Spread		Color Temperature		Finish
T24M	–	2C	–	ZOOM	–	Z2	–	30K	–	BK

T24M Track Head 24V Magnetic Connector

2C 2 Circuit

ZOOM Zoom

Z1 Zoom Adjust 15° to 55°
Z2 Zoom Adjust 20° to 50°

24K 2400K Very Warm White
27K 2700K Incandescent White
30K 3000K Warm White
30D 3000K Warm Dim to 1800K*
35K 3500K Neutral White
*Only available for Z2

BK Black Powder Coat
WH Warm White Powder Coat RAL 9010

	Z1		Z2		Z2	
BEAM ANGLE	15°	55°	20°	50°	20°	50°
COLOR TEMPERATURE	30K	30K	30K	30K	30D	30D
TOTAL LUMENS	686	873	795	1188	727	879
WATTS	16	16	16	16	15	15
LUMENS PER WATT (lm/w)	46	61	69	89	50	61
CRI	93	93	94	94	97	97
TM-30 DATA	R9: 66 Rf: 92 Rg: 101	R9: 66 Rf: 92 Rg: 101	R9: 74 Rf: 92 Rg: 102	R9: 74 Rf:92 Rg: 102	R9: 66 Rf: 94 Rg: 101	R9: 66 Rf: 94 Rg: 101

PROJECT		FIXTURE TYPE		DATE	

T24M TRACK HEADS, 2 CIRCUIT MAGNETIC

24VDC WITH INTEGRATED LED

REV 12.09.25

All uniform beam spread options are field changeable.

RADIANT LARGE

14 WATTS

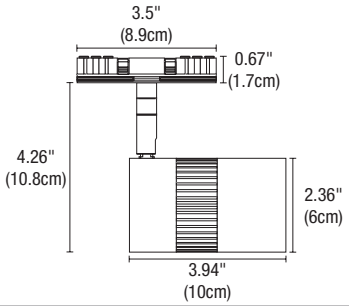

System		Type		Fixture		Beam Spread		Color Temperature		Finish
T24M	–	**2C**	–	**RADL**	–	**FL**	–	**30K**	–	**WH**

T24M Track Head 24V Magnetic Connector

2C 2 Circuit

RADL Radiant Large

NS Narrow Spot 10°
SP Spot 20°
NF Narrow Flood 35°
FL Flood 45°
WF Wide Flood 60°
Warm Dim: **NS** (15°), **SP** (25°)

24K 2400K Very Warm White
27K 2700K Incandescent White
30K 3000K Warm White
30D 3000D Warm Dim*
35K 3500K Neutral White
*Not available in NF

BK Black Powder Coat
WH Warm White Powder Coat RAL 9010

	BEAM ANGLE REFERENCE 45°				
COLOR TEMPERATURE	24K	27K	30K	30D	35K
TOTAL LUMENS	1389	1161	1199	838	1422
WATTS	14	14	14	14	14
LUMENS PER WATT (lm/w)	99	83	86	58	102
CRI	97	92	93	97	98
TM-30 DATA	R9: 60 Rf: 93 Rg: 98	R9: 97 Rf: 92 Rg: 100	R9: 64 Rf: 91 Rg: 98	R9: 90 Rf: 95 Rg:102	R9: 92 Rf: 94 Rg:101

RADIANT MEDIUM

11 WATTS (WARM DIM: 8 WATTS)

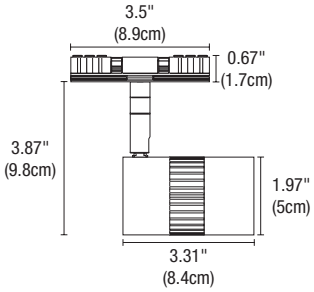

System		Type		Fixture		Beam Spread		Color Temperature		Finish
T24M	–	**2C**	–	**RADM**	–	**FL**	–	**30K**	–	**WH**

T24M Track Head 24V Magnetic Connector

2C 2 Circuit

RADM Radiant Medium

SP Spot 20°
NF Narrow Flood 35°
FL Flood 45°
WF Wide Flood 60°

24K 2400K Very Warm White
27K 2700K Incandescent White
30K 3000K Warm White
30D 3000D Warm Dim
35K 3500K Neutral White

BK Black Powder Coat
WH Warm White Powder Coat RAL 9010

	BEAM ANGLE REFERENCE 45°				
COLOR TEMPERATURE	24K	27K	30K	30D	35K
TOTAL LUMENS	765	639	660	360	783
WATTS	11	11	11	8	11
LUMENS PER WATT (lm/w)	70	58	64	47	76
CRI	97	92	93	93	98
TM-30 DATA	R9: 97 Rf: 92 Rg: 100	R9: 64 Rf: 91 Rg: 98	R9: 90 Rf: 95 Rg:102	R9: 92 Rf: 94 Rg:101	R9: 92 Rf: 94 Rg:101

PROJECT		FIXTURE TYPE		DATE	

T24M TRACK HEADS, 2 CIRCUIT MAGNETIC

24VDC WITH INTEGRATED LED

PURE EDGE PureSmart Lighting

Additional Lenses and Accessories

REV 12.09.25

TUBO LARGE LENS			SNOOT		LOUVER	FOCUS LENS	LINEAR SPREAD FILM
					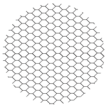		
ORDERING CODE	**STATIC WHITE** **LEN-TUBL-NS-SW** **LEN-TUBL-SP-SW** **LEN-TUBL-NF-SW** **LEN-TUBL-FL-SW** **LEN-TUBL-WF-SW**	**WARM DIM** **LEN-TUBL-SP-WD** **LEN-TUBL-NF-WD** **LEN-TUBL-FL-WD** **LEN-TUBL-WF-WD**	**STB16-BK** **STB16-WH (WHITE SHELL)**	**ST16-BK** **ST16-WH**	**L016-H**	**LF-TUBL-SF (SOFT FOCUS),** **MF (MEDIUM FOCUS),** **WF (WIDE FOCUS)**	**LF-TUBL-LS**
LENS SIZE	2" (50mm) Diameter		Conical snoot creates a 7° Beam spread and is designed to reduce spill and control glare. Spun aluminum.	Snoot is designed to reduce spill and control glare. Spun aluminum.	Hexcell louver eliminates glare. 0.125" Thickness.	Soft focus lens is included with every track head. Diffuses the beam, providing uniform illumination.	Linear spread film: directs the light into an elongated beam. Typical applications using 10°, 15°, 25° include illuminating landscape oriented art. 35°, 40°, 60° create an elongated oval typically used for wall washing.
BEAM SPREADS	**NS** (10°), **SP** (20°), **NF** (35°) **FL** (45°), **WF** (60°)						

TUBO SMALL LENS			SNOOT	LOUVER	FOCUS LENS	LINEAR SPREAD FILM
				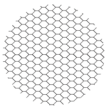		
ORDERING CODE	**STATIC WHITE** **LEN-TUBS-NS-SW** **LEN-TUBS-SP-SW** **LEN-TUBS-NF-SW** **LEN-TUBS-FL-SW** **LEN-TUBS-WF-SW**	**WARM DIM** **LEN-TUBS-NS-WD** **LEN-TUBS-SP-WD** **LEN-TUBS-NF-WD** **LEN-TUBS-FL-WD** **LEN-TUBS-WF-WD**	**TUBS-ST-BK** **TUBS-ST-WH (WHITE SHELL)**	**L011-H**	**LF-TUBS-SF (SOFT FOCUS),** **MF (MEDIUM FOCUS),** **WF (WIDE FOCUS)**	**LF-TUBS-LS**
LENS SIZE	1.37" (35mm) Diameter		Conical snoot creates a 7° Beam spread and is designed to reduce spill and control glare. Spun aluminum.	Hexcell louver eliminates glare. 0.125" Thickness.	Soft focus lens is included with every track head. Diffuses the beam, providing uniform illumination.	Linear spread film: directs the light into an elongated beam. Typical applications using 10°, 15°, 25° include illuminating landscape oriented art. 35°, 40°, 60° create an elongated oval typically used for wall washing.
BEAM SPREADS	**NS** (15°), **SP** (25°), **NF** (35°), **FL** (45°), **WF** (60°)					

RADIANT LARGE LENS			SNOOT	LOUVER	FOCUS LENS	LINEAR SPREAD FILM
				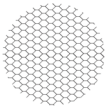		
ORDERING CODE	**STATIC WHITE** **LEN-RADL-NS-SW** **LEN-RADL-SP-SW** **LEN-RADL-NF-SW** **LEN-RADL-FL-SW** **LEN-RADL-WF-SW**	**WARM DIM** **LEN-RADL-NS-WD** **LEN-RADL-SP-WD** **LEN-RADL-FL-WD** **LEN-RADL-WF-WD**	**STB16-BK** **STB16-WH (WHITE SHELL)**	**L016-H**	**LF-RADL-SF (SOFT FOCUS),** **MF (MEDIUM FOCUS),** **WF (WIDE FOCUS)**	**LF-RADL-LS**
LENS SIZE	2" (50mm) Diameter		Conical snoot creates a 7° Beam spread and is designed to reduce spill and control glare. Spun aluminum.	Hexcell louver eliminates glare. 0.125" Thickness.	Soft focus lens is included with every track head. Diffuses the beam, providing uniform illumination.	Linear spread film: directs the light into an elongated beam. Typical applications using 10°, 15°, 25° include illuminating landscape oriented art. 35°, 40°, 60° create an elongated oval typically used for wall washing.
BEAM SPREADS	**NS** (10°), **SP** (20°), **NF** (35°), **FL** (45°), **WF** (60°)	**NS** (15°), **SP** (25°), **FL** (45°), **WF** (60°)				

RADIANT MEDIUM LENS			LOUVER	FOCUS LENS	LINEAR SPREAD FILM
			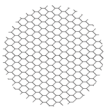		
ORDERING CODE	**STATIC WHITE** **LEN-RADM-SP-SW** **LEN-RADM-NF-SW** **LEN-RADM-FL-SW** **LEN-RADM-WF-SW**	**WARM DIM** **LEN-RADM-SP-WD** **LEN-RADM-NF-WD** **LEN-RADM-FL-WD** **LEN-RADM-WF-WD**	**L011-H**	**LF-RADM-SF (SOFT FOCUS)** **MF (MEDIUM FOCUS), WF (WIDE FOCUS)**	**LF-RADM-LS**
LENS SIZE	1.37" (35mm) Diameter		Hexcell louver eliminates glare. 0.125" Thickness.	Soft focus lens is included with every track head. Diffuses the beam, providing uniform illumination.	Linear spread film: directs the light into an elongated beam. Typical applications using 10°, 15°, 25° include illuminating landscape oriented art. 35°, 40°, 60° create an elongated oval typically used for wall washing.
BEAM SPREADS	**SP** (20°), **NF** (35°), **FL** (45°), **WF** (60°)				

PROJECT		FIXTURE TYPE		DATE	

T24M TRACK HEADS, 2 CIRCUIT MAGNETIC

24VDC WITH INTEGRATED LED

REV 12.09.25

TUBO LARGE RGBTW SMART TRACKHEAD Photometric Data at 3000K

D - Distance from TUBO LARGE fixture
FC - Initial foot candles at the center of beam
D**IA** - Diameter

12 Watt

SPOT BEAM ANGLE 16º

D'	FC	DIA.
1'	3680	3.5
2'	920	7.0
3'	409	10.5
4'	230	14.0
5'	147	17.5
6'	102	21.0
7'	75	24.5
8'	58	28.0

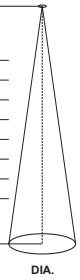

NARROW FLOOD BEAM ANGLE 30º

D'	FC	DIA.
1'	912	6
2'	228	13
3'	101	19
4'	57	26
5'	36	32
6'	25	39
7'	19	45
8'	14	52

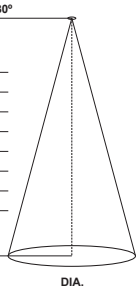

FLOOD BEAM ANGLE 35º

D'	FC	DIA.
1'	1024	7.5
2'	256	15.0
3'	114	22.5
4'	64	30.0
5'	41	37.5
6'	28	45.0
7'	21	52.5
8'	16	60.0

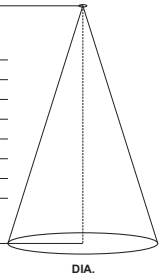

WIDE FLOOD BEAM ANGLE 45º

D'	FC	DIA.
1'	432	9.7
2'	108	19.4
3'	48	29.2
4'	27	38.9
5'	17	48.7
6'	12	58.4
7'	9	68.1
8'	7	77.9

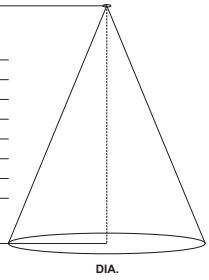

17 Watt

SPOT BEAM ANGLE 16º

D'	FC	DIA.
1'	5257	3.5
2'	1314	7.0
3'	584	10.5
4'	329	14.0
5'	210	17.5
6'	146	21.0
7'	107	24.5
8'	82	28.0

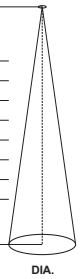

NARROW FLOOD BEAM ANGLE 30º

D'	FC	DIA.
1'	1303	6
2'	326	13
3'	145	19
4'	81	26
5'	52	32
6'	36	39
7'	27	45
8'	20	52

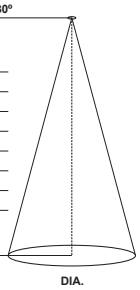

FLOOD BEAM ANGLE 35º

D'	FC	DIA.
1'	1463	7.5
2'	366	15.0
3'	163	22.5
4'	91	30.0
5'	59	37.5
6'	41	45.0
7'	30	52.5
8'	23	60.0

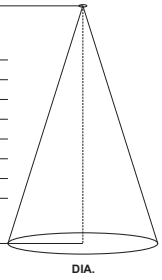

WIDE FLOOD BEAM ANGLE 45º

D'	FC	DIA.
1'	617	9.7
2'	154	19.4
3'	69	29.2
4'	39	38.9
5'	25	48.7
6'	17	58.4
7'	13	68.1
8'	10	77.9

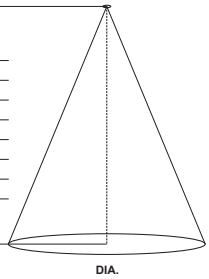

TUBO WALL WASH RGBTW SMART TRACKHEAD Photometric Data at 3000K

D - Distance from fixture
FC - Initial foot candles at the center of beam
DIA - Diameter

Tubo Wall Wash Foot Candle Chart

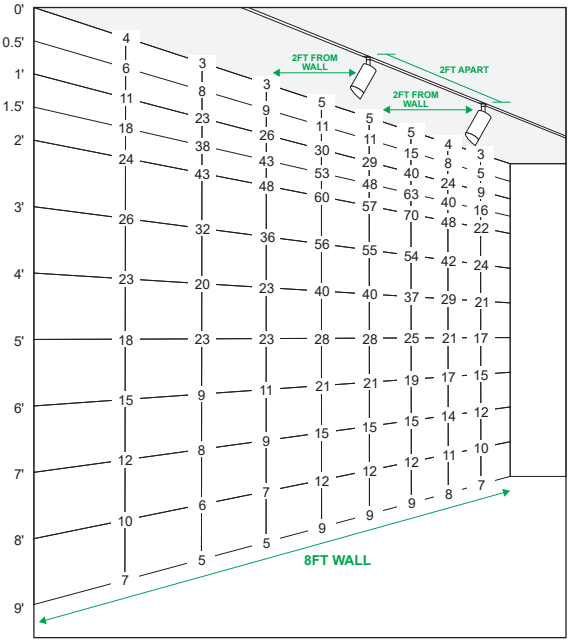

CANDLE POWER DISTRIBUTION

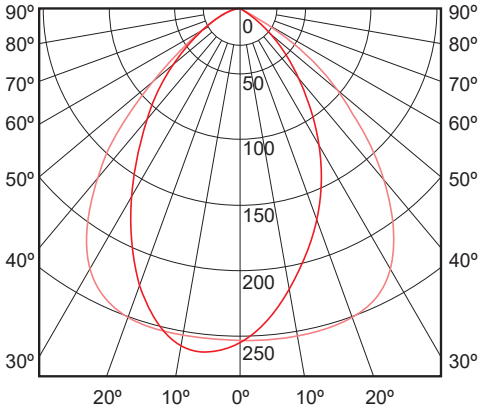

DIRECTION OF LIGHT

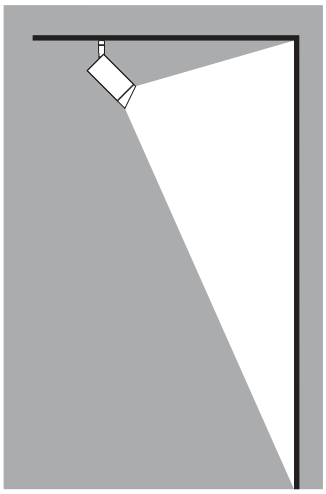

PROJECT		FIXTURE TYPE		DATE	

T24M TRACK HEADS, 2 CIRCUIT MAGNETIC

24VDC WITH INTEGRATED LED

REV 12.09.25

TUBO LARGE Photometric Data at 3000K

D - Distance from fixture
FC - Initial foot candles at the center of beam
DIA - Diameter

NARROW SPOT BEAM ANGLE 10º

D'	FC	DIA.
1'	17300	2.2"
2'	4330	4.3"
3'	1930	6.5"
4'	1080	8.6"
5'	694	10.8"
6'	482	12"
7'	354	15"
8'	271	18"

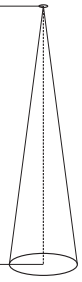

SPOT BEAM ANGLE 20º

D'	FC	DIA.
1'	2582	4.3"
2'	1860	8.6"
3'	828	13"
4'	466	17.3"
5'	298	21.6"
6'	207	25.9"
7'	152	30.2"
8'	117	34.6"

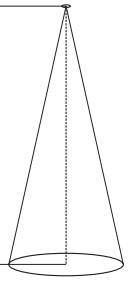

NARROW FLOOD BEAM ANGLE 35º

D'	FC	DIA.
1'	2780	7.6"
2'	695	15.1"
3'	309	22.7"
4'	174	30"
5'	111	37.2"
6'	77.2	45.4"
7'	56.7	53"
8'	43.4	62.5"

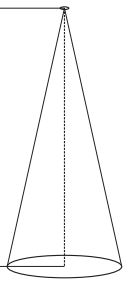

FLOOD BEAM ANGLE 45º

D'	FC	DIA.
1'	1610	9.8"
2'	403	18"
3'	179	29.2"
4'	101	40"
5'	64.5	48"
6'	44.8	58.3"
7'	32.9	68"
8'	25.2	80"

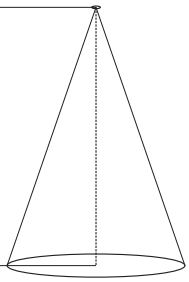

WIDE FLOOD BEAM ANGLE 60º

D'	FC	DIA.
1'	561	16.2"
2'	140	32.4"
3'	62.3	48"
4'	35	64.8"
5'	22.4	81"
6'	15.6	97.2"
7'	11.4	113.4"
8'	8.8	129.6"

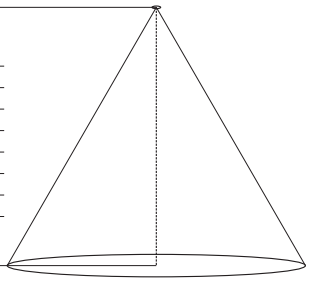

TUBO SMALL Photometric Data at 3000K

D - Distance from fixture
FC - Initial foot candles at the center of beam
DIA - Diameter

NARROW SPOT BEAM ANGLE 15º

D'	FC	DIA.
1'	3890	3.2"
2'	972	6.4"
3'	432	9.7"
4'	243	12.9"
5'	156	16.2"
6'	108	19.4"
7'	79	22.6"
8'	61	25.9"

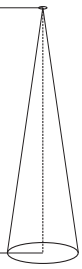

SPOT BEAM ANGLE 25º

D'	FC	DIA.
1'	2080	5.4"
2'	520	10.8"
3'	231	16.2"
4'	130	21.6"
5'	83	27"
6'	57.8	32.4"
7'	42.4	37.8"
8'	32.5	43.2"

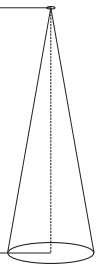

NARROW FLOOD BEAM ANGLE 35º

D'	FC	DIA.
1'	1540	7.5"
2'	385	15.1"
3'	171	22.6"
4'	96.3	30"
5'	61.6	37.2"
6'	42.8	45.3"
7'	31.4	53"
8'	24.1	62.5"

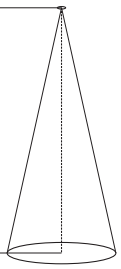

FLOOD BEAM ANGLE 45º

D'	FC	DIA.
1'	496	9.7"
2'	124	19.4"
3'	55.1	29.1"
4'	31	38.8"
5'	19.8	48.6"
6'	13.8	58.3"
7'	10.1	68.0"
8'	7.75	77.7"

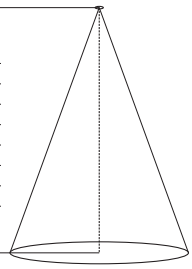

WIDE FLOOD BEAM ANGLE 60º

D'	FC	DIA.
1'	265	16.2"
2'	66.3	32.4"
3'	29.4	48"
4'	16.6	64.8"
5'	10.6	81"
6'	7.3	97.2"
7'	5.4	113.4"
8'	4.1	129.6"

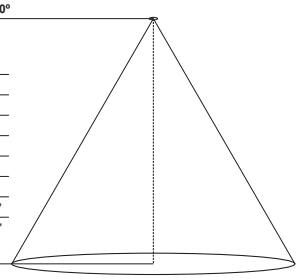

PROJECT		FIXTURE TYPE		DATE	

T24M TRACK HEADS, 2 CIRCUIT MAGNETIC

24VDC WITH INTEGRATED LED

REV 12.09.25

TUBO LARGE DOWNLIGHT Photometric Data at 3000K

D - Distance from fixture
FC - Initial foot candles at the center of beam
DIA - Diameter

NARROW SPOT BEAM ANGLE 10º

D'	FC	DIA.
1'	17300	2.2"
2'	4330	4.3"
3'	1930	6.5"
4'	1080	8.6"
5'	694	10.8"
6'	482	12"
7'	354	15"
8'	271	18"

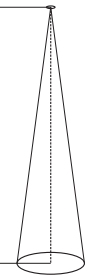

SPOT BEAM ANGLE 20º

D'	FC	DIA.
1'	2582	4.3"
2'	1860	8.6"
3'	828	13"
4'	466	17.3"
5'	298	21.6"
6'	207	25.9"
7'	152	30.2"
8'	117	34.6"

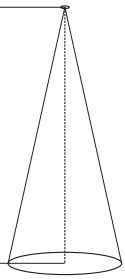

NARROW FLOOD BEAM ANGLE 35º

D'	FC	DIA.
1'	2780	7.6"
2'	695	15.1"
3'	309	22.7"
4'	174	30"
5'	111	37.2"
6'	77.2	45.4"
7'	56.7	53"
8'	43.4	62.5"

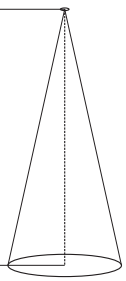

FLOOD BEAM ANGLE 45º

D'	FC	DIA.
1'	1610	9.8"
2'	403	18"
3'	179	29.2"
4'	101	40"
5'	64.5	48"
6'	44.8	58.3"
7'	32.9	68"
8'	25.2	80"

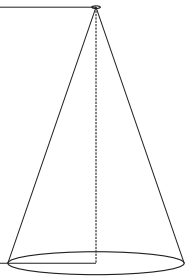

WIDE FLOOD BEAM ANGLE 60º

D'	FC	DIA.
1'	561	16.2"
2'	140	32.4"
3'	62.3	48"
4'	35	64.8"
5'	22.4	81"
6'	15.6	97.2"
7'	11.4	113.4"
8'	8.8	129.6"

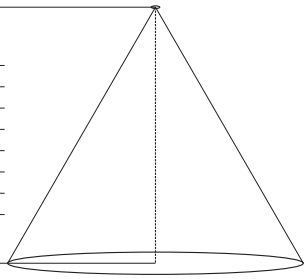

TUBO SMALL DOWNLIGHT Photometric Data at 3000K

D - Distance from fixture
FC - Initial foot candles at the center of beam
DIA - Diameter

NARROW SPOT BEAM ANGLE 10º

D'	FC	DIA.
1'	17300	2.2"
2'	4330	4.3"
3'	1930	6.5"
4'	1080	8.6"
5'	694	10.8"
6'	482	12"
7'	354	15"
8'	271	18"

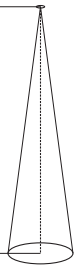

SPOT BEAM ANGLE 20º

D'	FC	DIA.
1'	2582	4.3"
2'	1860	8.6"
3'	828	13"
4'	466	17.3"
5'	298	21.6"
6'	207	25.9"
7'	152	30.2"
8'	117	34.6"

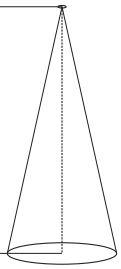

NARROW FLOOD BEAM ANGLE 35º

D'	FC	DIA.
1'	2780	7.6"
2'	695	15.1"
3'	309	22.7"
4'	174	30"
5'	111	37.2"
6'	77.2	45.4"
7'	56.7	53"
8'	43.4	62.5"

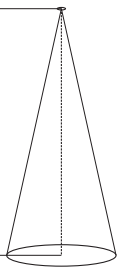

FLOOD BEAM ANGLE 45º

D'	FC	DIA.
1'	1610	9.8"
2'	403	18"
3'	179	29.2"
4'	101	40"
5'	64.5	48"
6'	44.8	58.3"
7'	32.9	68"
8'	25.2	80"

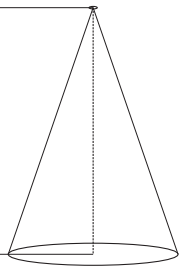

WIDE FLOOD BEAM ANGLE 60º

D'	FC	DIA.
1'	561	16.2"
2'	140	32.4"
3'	62.3	48"
4'	35	64.8"
5'	22.4	81"
6'	15.6	97.2"
7'	11.4	113.4"
8'	8.8	129.6"

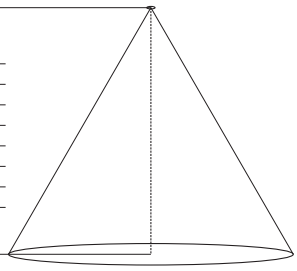

PROJECT		FIXTURE TYPE		DATE	

T24M TRACK HEADS, 2 CIRCUIT MAGNETIC

24VDC WITH INTEGRATED LED

REV 12.09.25

ZOOM Z1 Photometric Data at 3000K

D - Distance from fixture
FC - Initial foot candles at the center of beam
DIA - Diameter

15° BEAM ANGLE

D'	FC	DIA.
1'	7870	3"
2'	1970	5"
3'	875	8"
4'	492	10"
5'	315	12"
6'	219	16"
7'	161	18"
8'	132	21"

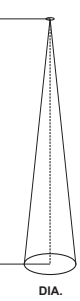

55° BEAM ANGLE

D'	FC	DIA.
1'	992	10.8"
2'	248	21.6"
3'	110	32.4"
4'	62	43.2"
5'	40	54"
6'	28	75.6"
7'	20	86.4"
8'	16	97.2"

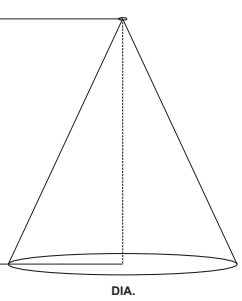

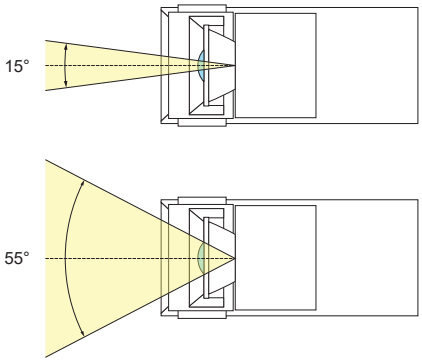

Z1: Adjustable between 15° and 55°

ZOOM Z2 Photometric Data at 3000K

D - Distance from fixture
FC - Initial foot candles at the center of beam
DIA - Diameter

20° BEAM ANGLE

D'	FC	DIA.
1'	3950	6"
2'	988	10"
3'	439	16"
4'	247	20"
5'	158	24"
6'	110	32"
7'	80.7	36"
8'	61.8	42"

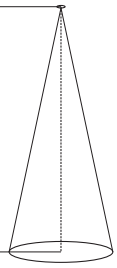

50° BEAM ANGLE

D'	FC	DIA.
1'	1220	10.8"
2'	304	21.6"
3'	135	32.4"
4'	76	43.2"
5'	48.6	54"
6'	33.8	75.6"
7'	25	86.4"
8'	19	97.2"

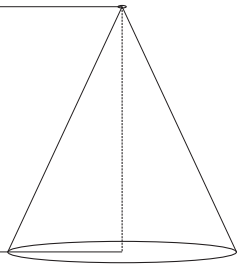

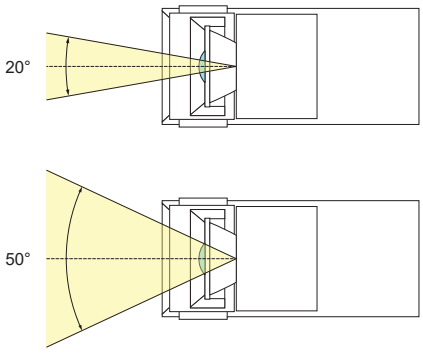

Z2: Adjustable between 20° and 50°

TUBO WALL WASH Photometric Data at 3000K

D - Distance from fixture
FC - Initial foot candles at the center of beam
DIA - Diameter

Tubo Wall Wash Foot Candle Chart

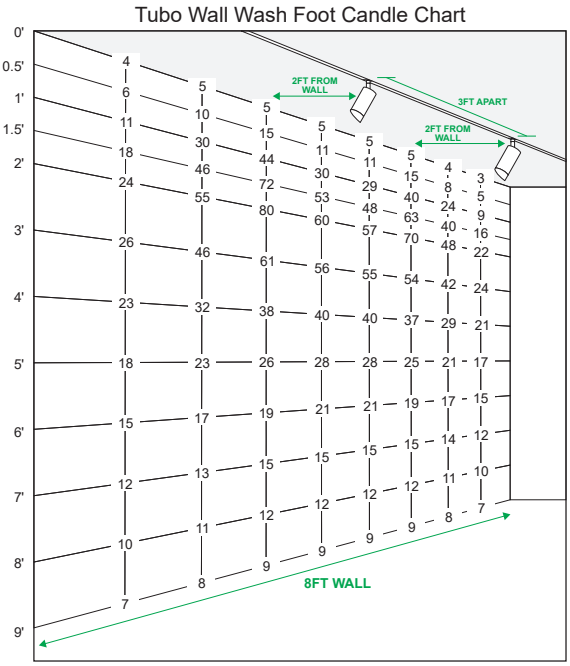

CANDLE POWER DISTRIBUTION

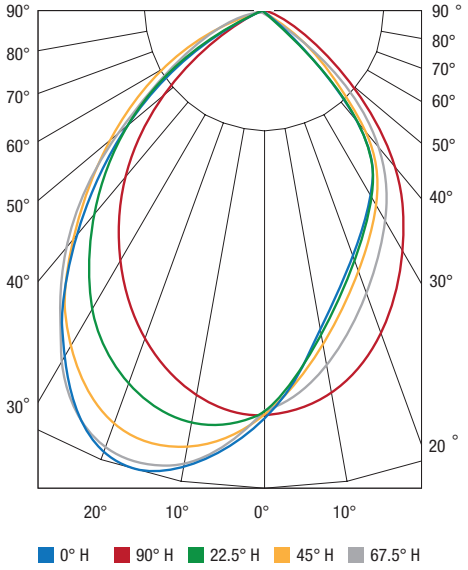

DIRECTION OF LIGHT

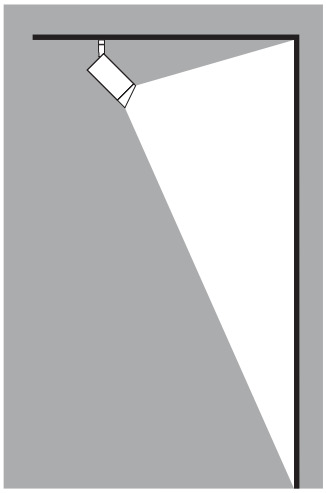

PROJECT		FIXTURE TYPE		DATE	

T24M TRACK HEADS, 2 CIRCUIT MAGNETIC

24VDC WITH INTEGRATED LED

REV 12.09.25

RADIANT LARGE Photometric Data at 3000K

D - Distance from fixture
FC - Initial foot candles at the center of beam
DIA - Diameter

NARROW SPOT BEAM ANGLE 10º

D'	FC	DIA.
1'	17300	2.2"
2'	4330	4.3"
3'	1930	6.5"
4'	1080	8.6"
5'	694	10.8"
6'	482	12"
7'	354	15"
8'	271	18"

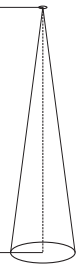

SPOT BEAM ANGLE 20º

D'	FC	DIA.
1'	2582	4.3"
2'	1860	8.6"
3'	828	13"
4'	466	17.3"
5'	298	21.6"
6'	207	25.9"
7'	152	30.2"
8'	117	34.6"

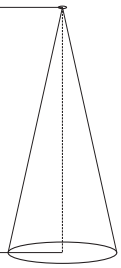

NARROW FLOOD BEAM ANGLE 35º

D'	FC	DIA.
1'	2780	7.6"
2'	695	15.1"
3'	309	22.7"
4'	174	30"
5'	111	37.2"
6'	77.2	45.4"
7'	56.7	53"
8'	43.4	62.5"

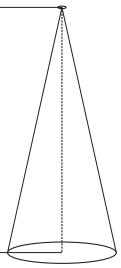

FLOOD BEAM ANGLE 45º

D'	FC	DIA.
1'	1610	9.8"
2'	403	18"
3'	179	29.2"
4'	101	40"
5'	64.5	48"
6'	44.8	58.3"
7'	32.9	68"
8'	25.2	80"

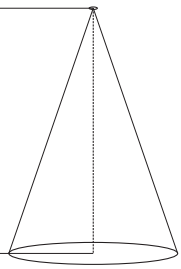

WIDE FLOOD BEAM ANGLE 60º

D'	FC	DIA.
1'	561	16.2"
2'	140	32.4"
3'	62.3	48"
4'	35	64.8"
5'	22.4	81"
6'	15.6	97.2"
7'	11.4	113.4"
8'	8.8	129.6"

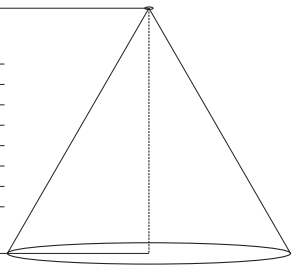

RADIANT MEDIUM Photometric Data at 3000K

D - Distance from fixture
FC - Initial foot candles at the center of beam
DIA - Diameter

SPOT BEAM ANGLE 20º

D'	FC	DIA.
1'	6100	3.2"
2'	1520	6.5"
3'	678	9.7"
4'	381	13"
5'	244	16.2"
6'	169	19.4"
7'	124	22.8"
8'	95.3	25.9"

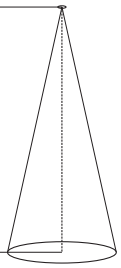

NARROW FLOOD BEAM ANGLE 35º

D'	FC	DIA.
1'	1540	7.6"
2'	385	15.1"
3'	171	22.7"
4'	96.3	30"
5'	61.6	37.2"
6'	42.8	45.4"
7'	31.4	53"
8'	24.1	62.5"

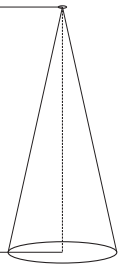

FLOOD BEAM ANGLE 45º

D'	FC	DIA.
1'	496	9.7"
2'	124	19.4"
3'	55.1	29.2"
4'	131	38.9"
5'	19.8	48.6"
6'	13.8	58.3"
7'	10.1	68"
8'	7.8	77.8"

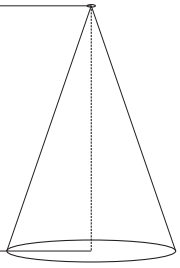

WIDE FLOOD BEAM ANGLE 60º

D'	FC	DIA.
1'	265	16.2"
2'	66.3	32.4"
3'	29.4	48"
4'	16.6	64.8"
5'	10.6	81"
6'	7.3	97.2"
7'	5.4	113.4"
8'	4.1	129.6"

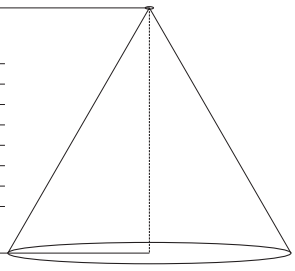

PROJECT		FIXTURE TYPE		DATE	

UNIVERSAL POWER SUPPLIES WITH TRIM

24VDC, UNIVERSAL DIMMING (ELV, TRIAC, 0-10V) STATIC WHITE & WARM DIM FOR TRACK HEADS

REV 12.09.25

ELV WIRING DIAGRAM

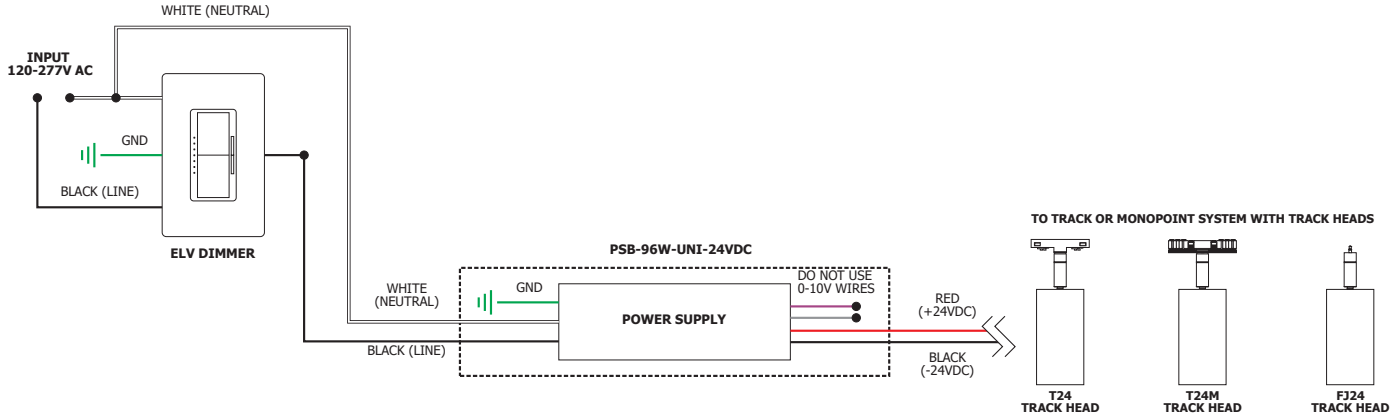

0-10V WIRING DIAGRAM

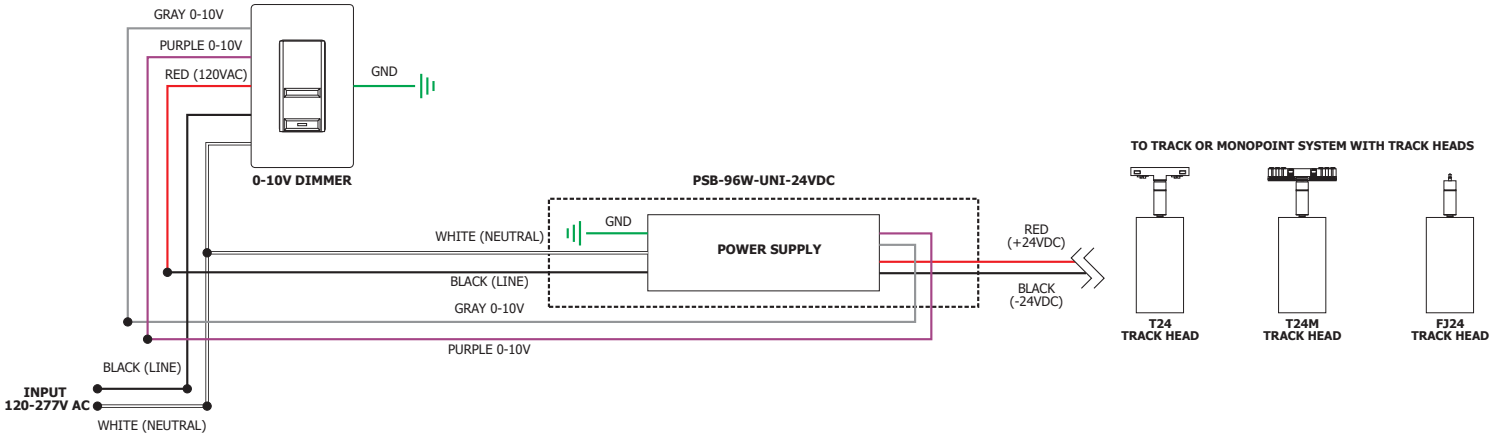

SMART WIRING DIAGRAM & NETWORK TOPOGRAPHY

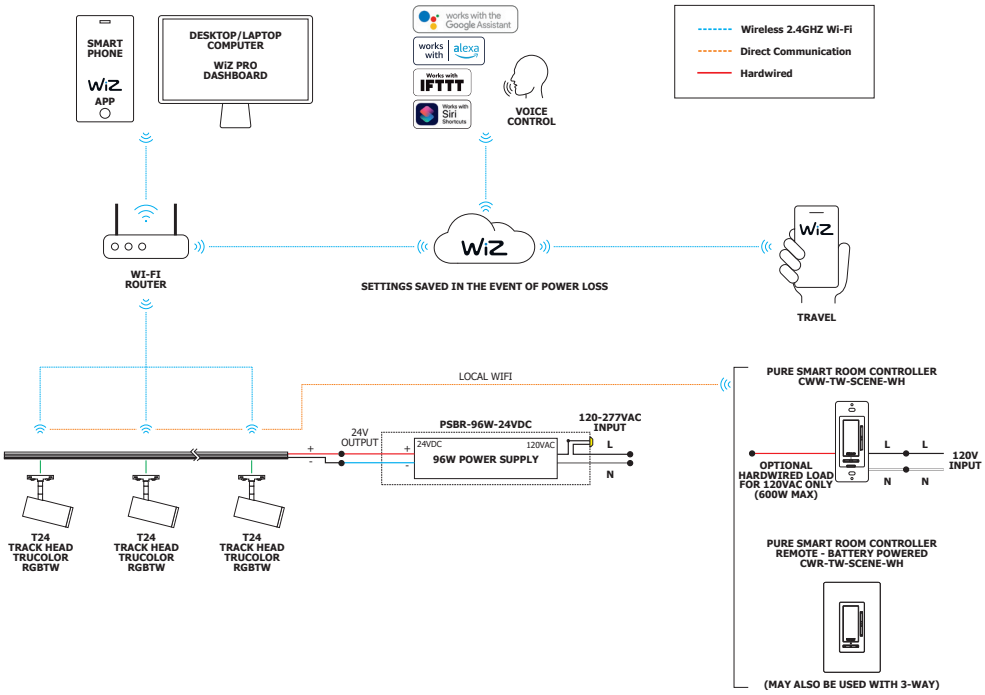

PROJECT		FIXTURE TYPE		DATE	

TM30 DATA

24VDC WITH INTEGRATED LED

REV 12.09.25

TM-30-15 DATA: Consistent color temperatures among multiple track heads is possible through a 3 phase binning process in which each order is inspected with a color meter to ensure uniformity.

2400K | Rf: 91.2 | Rg: 96.8

Color Vector Graphic

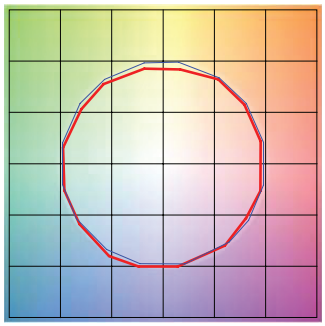

Test Reference

		GRAPHIC SHIFTS %	
HUE BIN	Rf	CHROMA	HUE
1	92.0	-2.4%	1.5%
2	94.7	-2.1%	0.0%
3	95.4	-1.9%	-0.1%
4	88.7	-6.7%	-3.1%
5	92.8	-5.6%	1.0%
6	92.7	-3.4%	3.4%
7	89.9	-4.3%	4.1%
8	92.4	-1.4%	4.4%
9	89.0	-0.6%	5.8%
10	88.9	0.4%	6.2%
11	89.7	4.0%	5.4%
12	92.6	3.0%	-0.7%
13	90.9	1.1%	-7.0%
14	89.9	0.5%	-5.8%
15	92.1	-3.2%	0.1%
16	88.9	-1.7%	-6.3%

2700K | Rf: 87.7 | Rg: 96.1

Color Vector Graphic

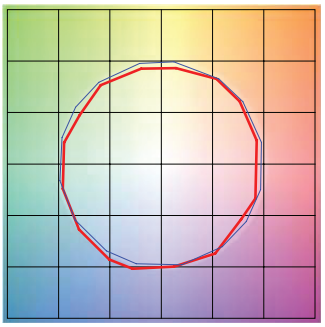

Test Reference

		GRAPHIC SHIFTS %	
HUE BIN	Rf	CHROMA	HUE
1	88.0	-4.3%	2.6%
2	91.6	-2.4%	2.0%
3	93.7	-1.4%	1.9%
4	88.9	-5.6%	-3.1%
5	92.3	-5.5%	-0.5%
6	92.9	-3.5%	0.1%
7	84.5	-7.5%	4.6%
8	90.8	-3.0%	4.4%
9	84.5	-1.3%	8.3%
10	83.9	2.0%	9.8%
11	87.2	5.3%	7.1%
12	89.2	5.4%	-2.6%
13	88.7	0.3%	-7.8%
14	86.8	1.7%	-9.3%
15	87.6	-5.4%	-1.3%
16	83.6	-3.3%	-9.5%

3000K | Rf: 88.1 | Rg: 99.7

Color Vector Graphic

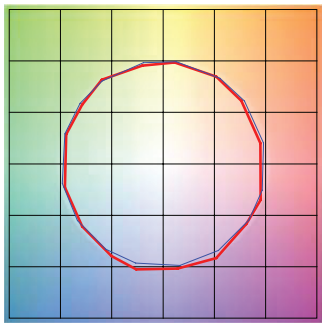

Test Reference

		GRAPHIC SHIFTS %	
HUE BIN	Rf	CHROMA	HUE
1	92.5	-3.1%	0.3%
2	93.3	-2.3%	1.9%
3	90.9	-0.8%	3.9%
4	94.3	-1.1%	1.4%
5	92.5	-2.6%	1.5%
6	96.4	1.2%	-0.3%
7	92.6	-2.5%	-0.0%
8	96.9	-1.4%	0.2%
9	92.3	-1.8%	4.3%
10	86.6	-0.7%	7.0%
11	86.5	2.4%	8.2%
12	89.8	5.9%	1.7%
13	93.9	2.6%	-2.7%
14	89.4	5.1%	-5.8%
15	90.1	-0.1%	-4.7%
16	86.5	0.3%	-9.7%

3500K | Rf: 86.1 | Rg: 95.5

Color Vector Graphic

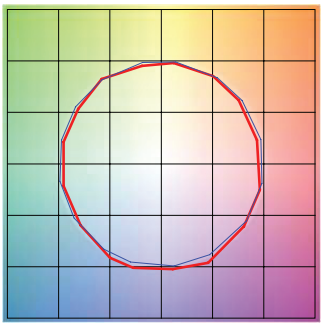

Test Reference

		GRAPHIC SHIFTS %	
HUE BIN	Rf	CHROMA	HUE
1	90.8	-3.8%	0.3%
2	92.3	-2.8%	2.1%
3	89.7	-1.0%	4.3%
4	92.6	-1.4%	1.7%
5	91.8	-3.1%	1.3%
6	96.2	0.8%	-0.4%
7	92.9	-3.2%	0.2%
8	94.3	-2.5%	1.5%
9	90.4	-2.5%	5.2%
10	84.3	-1.4%	9.5%
11	83.1	3.5%	9.8%
12	88.2	4.8%	3.4%
13	94.0	2.7%	-2.0%
14	88.7	5.9%	-5.8%
15	88.7	0.7%	-5.9%
16	86.8	-0.7%	-6.7%

3000D | Rf: 89.8 | Rg: 101.4

Color Vector Graphic

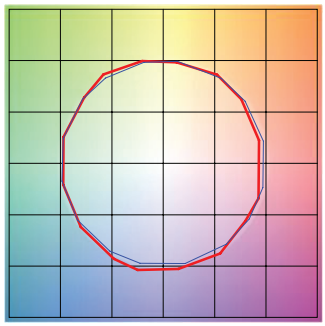

Test Reference

		GRAPHIC SHIFTS %	
HUE BIN	Rf	CHROMA	HUE
1	90.2	-4.2%	1.5%
2	90.9	-2.0%	3.7%
3	87.9	0.8%	5.5%
4	92.1	-0.9%	0.6%
5	93.0	1.5%	1.6%
6	92.2	3.9%	-0.2%
7	92.1	-0.3%	-2.0%
8	96.7	0.0%	-1.2%
9	92.5	-0.6%	3.7%
10	88.3	1.1%	7.0%
11	87.2	4.1%	7.4%
12	87.2	6.7%	-1.0%
13	88.2	3.8%	-7.2%
14	85.3	4.3%	-9.9%
15	90.9	-2.2%	-3.6%
16	83.4	-2.2%	-11.2%

PROJECT		FIXTURE TYPE		DATE	