SHAYD / SHAYD XL PENDANT

WARNING:
Turn off power at circuit before wiring.
Always consult a licensed electrician.

PARTS AND HARDWARE

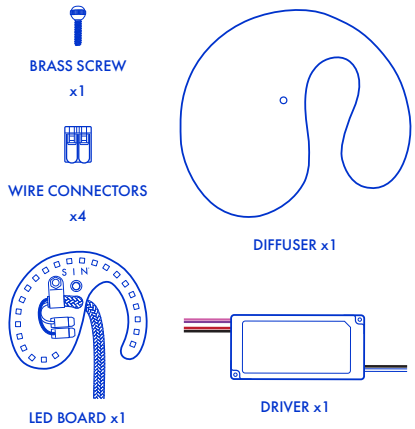

INSTALLATION INSTRUCTIONS

1. Unroll the SHAYD shade and let it rest until completely flat, approx. 24–48 hrs, weighing it down if needed.
2. Unscrew the brass screw at the bottom of the diffuser, separating it from the LED board.
3. Remove brass screw and diffuser, set aside.
4. Pull the LED board out of ceramic shade so it is approx 2 ft away from ceramic shade.
5. Insert the LED board through cut-out hole in shade, aligning markings with the diagram.
6. Gently fold the shade using notches as guides, DO NOT press hard or creases may form.
7. Shape shade to match the shape of the ceramic form, then slide it inside the ceramic shade.

1

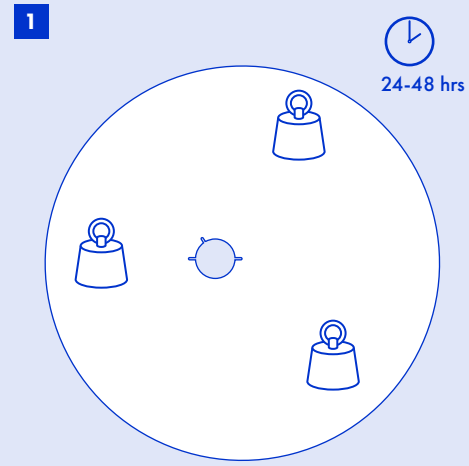

NOTCHES = FOLD MARKERS

2

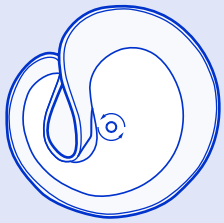

3

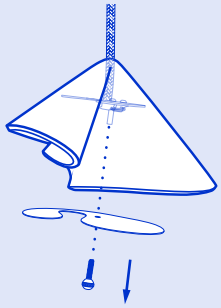

4

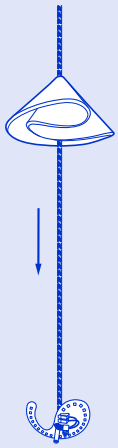

5

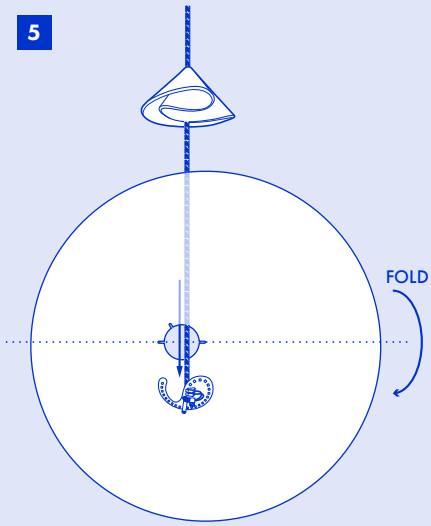

6

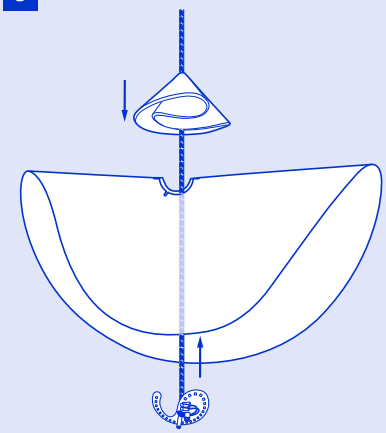

7

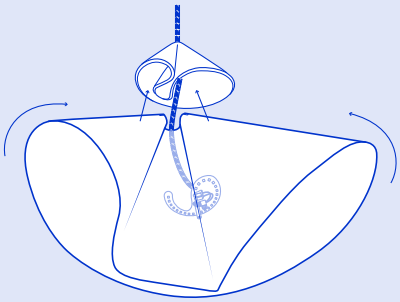

SIN®

SHAYD / SHAYD XL PENDANT

WARNING:
Turn off power at circuit before wiring.
Always consult a licensed electrician.

INSTALLATION INSTRUCTIONS (CONT.)

8. Slide the LED board into place so it rests in the cone, with the shade positioned between the ceramic and the board.
9. Adjust the placement of the LED board as needed to follow the shape of the interior of the shade.
10. Insert the diffuser so it fits snugly in the fixture, with the hole aligned to the metal standoff. Secure it in place with the brass screw.
11. Adjust placement of the diffuser as needed so it follows the shape of the interior of shade.

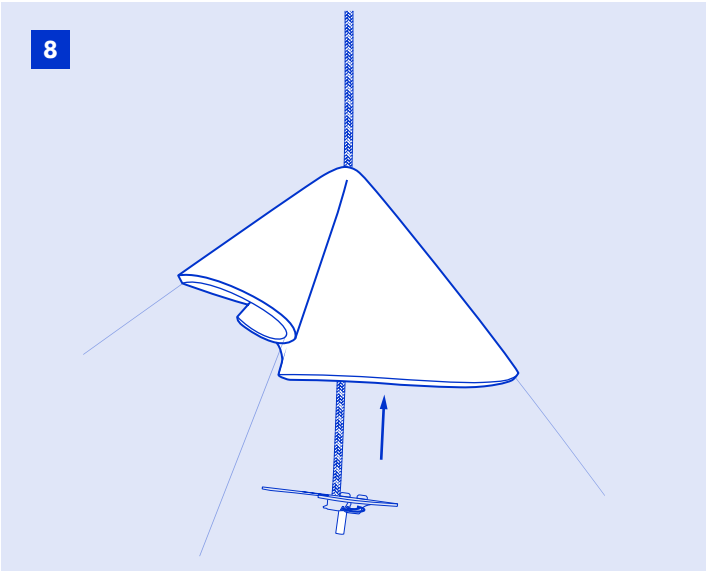

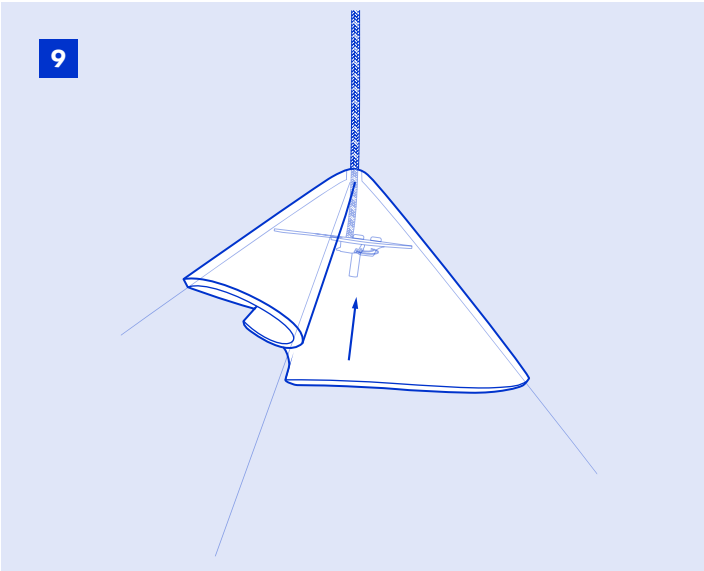

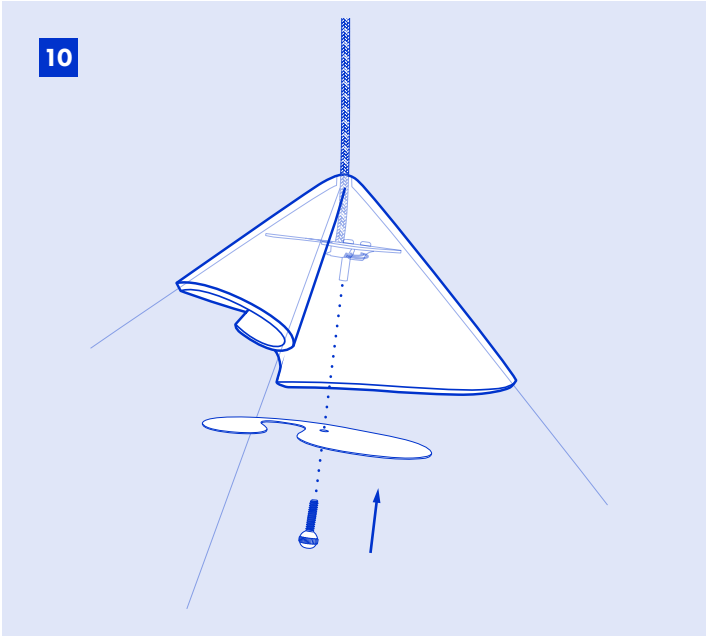

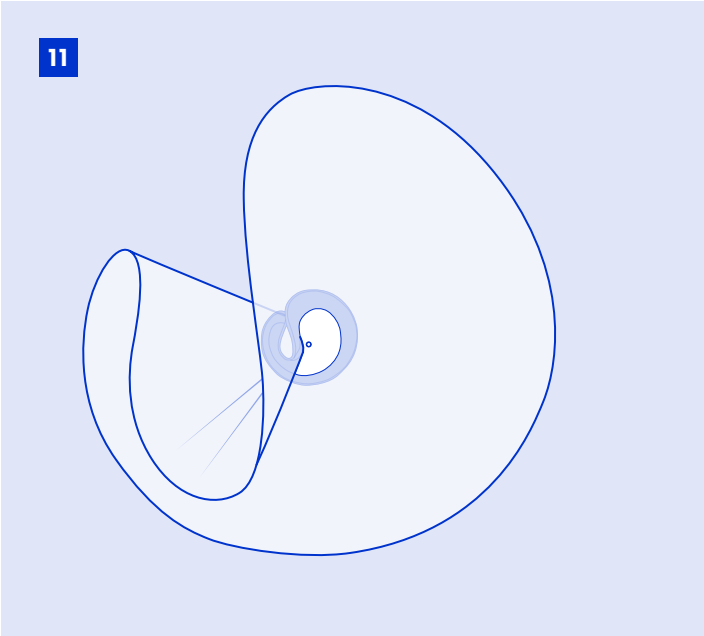

SIN®

SHAYD / SHAYD XL PENDANT

INSTALLATION INSTRUCTIONS (CONT.)

12 Thread cord through canopy and crossbar, make electrical connections, and place driver into J-box. Attach crossbar to J-box, and attach canopy.

WARNING:
Turn off power at circuit before wiring.
Always consult a licensed electrician.

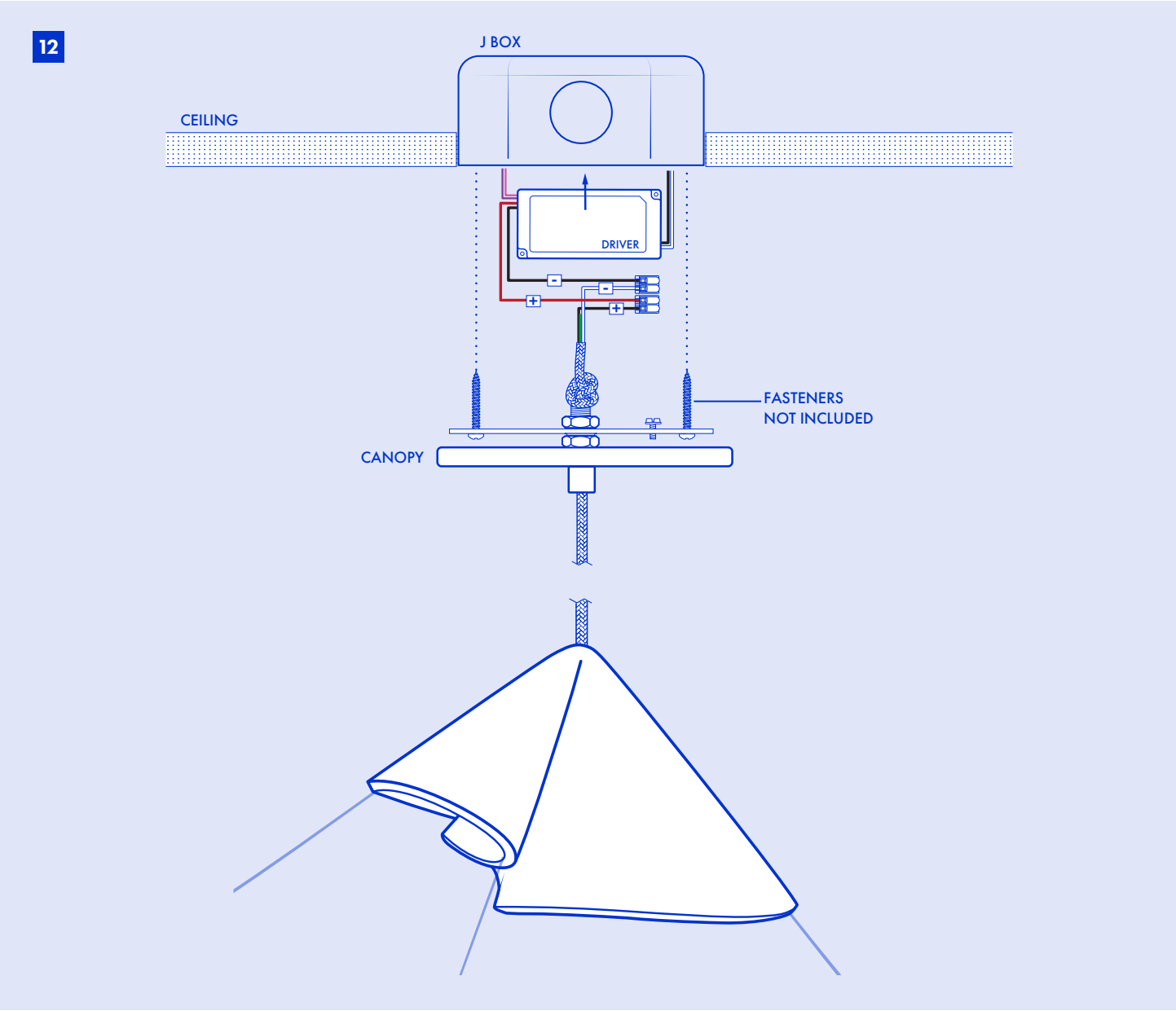

SIN®