Figure 1

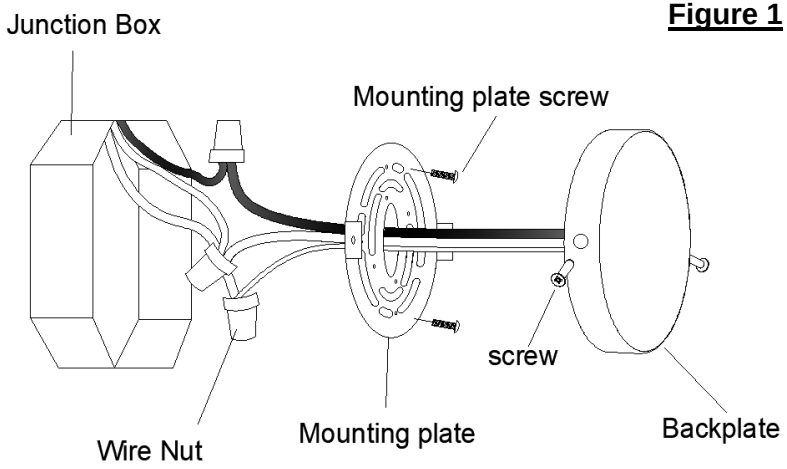

Figure 2

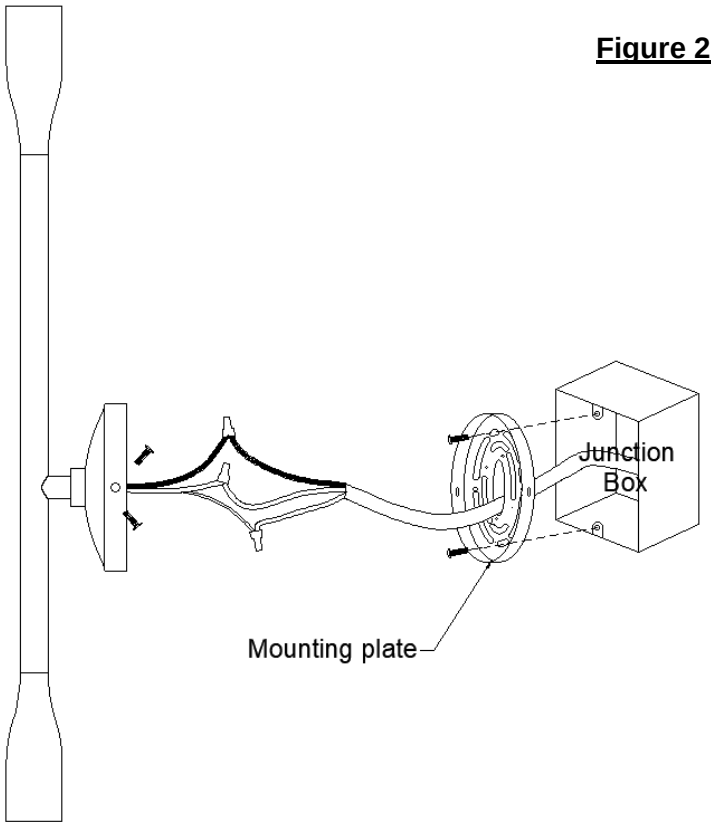

REGINA ANDREW

DETROIT

ITEM NO: 15-1224
Cobra Sconce

These instructions are provided for your safety. Read completely before installing this fixture. Switch off the main electrical supply from the main fuse box/circuit breaker before installation. Carefully inspect item before installation.

ASSEMBLY INSTRUCTIONS

MOUNTING INSTRUCTION:

A. FOR WIRING DIRECTLY INTO JUNCTION BOX (Figure 1)

1. Remove mounting plate from lamp back plate by removing the attached screws on the back plate and attach the mounting plate to the junction box. Adjust the mounting plate so that the tabs on the side are level.
2. Connect the wires of lamp to the wires of junction box; a. neutral junction-box-wire to white lamp wire; b. hot junction-box-wire to black lamp wire; c. secure wires with the included wire nuts. d. wrap bare ground junction-box-wire to green screw on mounting plate.
3. Install lamp to the mounting plate using screws provided.

CLEANING AND CARE:

Use a soft cloth only, do not use any chemical or abrasive cleaners.

IMPORTANT SAFETY INSTRUCTIONS

WE STRONGLY RECOMMEND INSTALLATION BY A LICENSED ELECTRICIAN

Made in China