Lightology

lightology.com
866-954-4489
06-02-26

Project:

Company:

Location: Fixture Type:

SPEC #: **KZC1009687**

Approved On: Approved By:

Rotaire Tall Wall Sconce

By Kuzco Lighting

Description

The Rotaire Tall Wall Sconce is inspired by the natural forms and vines of flowers, bringing minimalism and beauty to your interior space. Each bud emits a bloom of light from the Frosted acrylic diffuser. Finished in Black. Stems and heads adjust to direct light where you want it. Dimmable with a triac or low voltage electronic dimmer, not included. ETL listed.

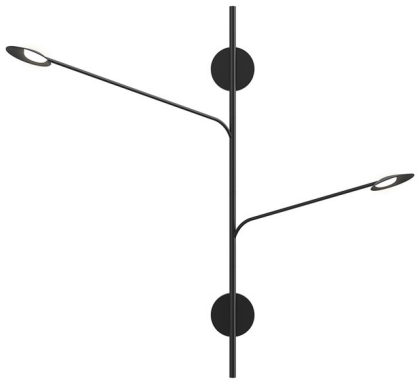

Shown in black / frosted

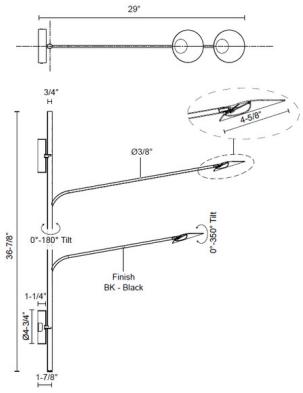

Specifications

COLOR	Frosted
BODY FINISH	Black
WATTAGE	12W
DIMMER	Low Voltage Electronic
DIMENSIONS	4.625"W x 36.875"H x 29"D
INTEGRATED LED MODULE	2 x LED/6W/120V LED

Technical Information

PRODUCT DIMENSIONS	Backplate: 4.75" Dia.
LAMP LIFE	50000 hours
COLOR RENDERING	90 CRI
LAMP COLOR	3000K
LUMENS/WATT	104.17
LUMINOUS FLUX	625 lumens

CLICK TO VIEW PRODUCT

Notes: