Lightology

lightology.com
866-954-4489
08-28-25

Project:

Company:

Location: Fixture Type:

SPEC #: **WAC1042374**

Approved On: Approved By:

Ocularc 3.5IN RD Warm Dim Remodel Housing

By WAC Lighting

Description

The Ocularc 3.5 Inch Round Non-IC Remodel Housing, designed for use with flanged trims, features a single spot light source with 0-30 degree vertical adjustment and 365 degree horizontal adjustment. Non-IC remodel housing with integral light engine and driver concealed within the fixture. Non-IC designation requires a 3 inch minimum clearance away from insulation. Accepts one honeycomb louver or optical accessory, sold separately. Dimmable to 1% with an electronic low voltage (ELV) or Triac dimmer, or 5% with a 0-10V dimmer, sold separately. A complete fixture requires a housing and trim, sold separately.

Shown in black

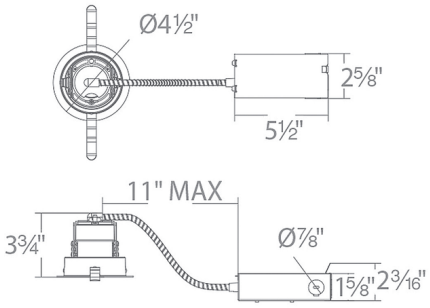

Specifications

REFLECTOR/BAFFLE COLOR	N/A
BODY FINISH	Black
WATTAGE	16W
DIMMER	Low Voltage Electronic
DIMENSIONS	11"L x 4.5"W x 3.75"H
INTEGRATED LED MODULE	1 x LED/16W/120-277V LED

Technical Information

APERTURE SIZE	3.500"
APERTURE SHAPE	Round
HOUSING HEIGHT	4"
HOUSING TYPE	Remodel NON IC
CEILING TYPE	Drywall with Trim
FUNCTION	Downlight
LAMP LIFE	50000 hours
COLOR RENDERING	95 CRI
LAMP COLOR	3000K Warm Dim

CLICK TO VIEW PRODUCT

Notes: