Lightology

lightology.com
866-954-4489
04-25-26

Project:

Company:

Location: Fixture Type:

SPEC #: **RAB1103486**

Approved On: Approved By:

Grace Wall Sconce

By Robert Abbey

Description

The Grace Wall Sconce is beautifully balanced, featuring a curved glass shade and square backplate with bevel detailing. It is perfect for transitional and contemporary spaces, bringing a refined touch to bathrooms, hallways, or dining rooms. This sconce can be installed facing up or down, and can be hard-wired or a plug-in. For plug-in use, an on/off cord switch and 24 inch cord cover are included.

Shown in polished nickel / clear

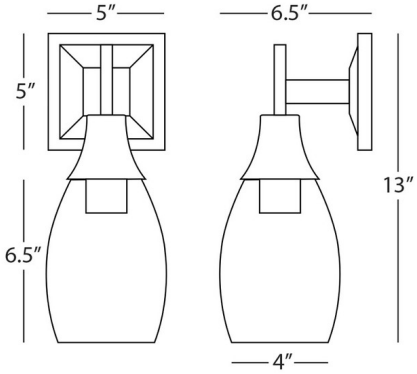

Specifications

COLOR	Clear
BODY FINISH	Polished Nickel
WATTAGE	60W
DIMMER	Standard 120V
DIMENSIONS	5"W x 13"H x 6.5"D
BULB NOT INCLUDED	1 x Edison/Medium (E26)/60W/120V Incandescent
OTHER BULB OPTIONS	1 x A19/Medium (E26)/120V LED 1 x A19/Medium (E26)/120V Incandescent 1 x Edison/Medium (E26)/120V LED
COUNTRY OF ORIGIN	China

Technical Information

PRODUCT DIMENSIONS	Backplate: Square, 5"W x 5"H x 1"D

CLICK TO VIEW PRODUCT

Notes: