Lightology

lightology.com
866-954-4489
06-04-26

Project:

Company:

Location: Fixture Type:

SPEC #: **ALR1104943**

Approved On: Approved By:

Capri Wall Sconce

By Alora Mood

DAMP

Description

The Capri Wall Sconce fuses modern art with modern lighting. Taking cues from color-blocked abstract art, the shade is a diagonally sliced melding of metal and glass. With its sharp silhouette and contrasting accent at the shade base, the Capri is a contemporary standout piece for a range of spaces from bathrooms and powder rooms to hallways and bedrooms. It can be installed facing up or down.

Shown in chrome / clear

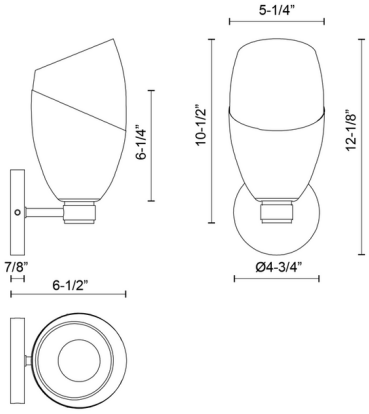

Specifications

COLOR	Clear
BODY FINISH	Chrome
WATTAGE	60W
DIMMER	Standard 120V
DIMENSIONS	5.25"W x 12.125"H x 6.5"D
BULB NOT INCLUDED	1 x Edison Globe/Medium (E26)/60W/120V Incandescent
OTHER BULB OPTIONS	1 x A19/Medium (E26)/120V Incandescent
	1 x A19/Medium (E26)/120V LED
	1 x Edison Globe/Medium (E26)/120V LED
COUNTRY OF ORIGIN	China

CLICK TO VIEW PRODUCT

Notes: