Lightology

lightology.com
866-954-4489
10-28-26

Project:

Company:

Location: Fixture Type:

SPEC #: **ACC1149146**

Approved On: Approved By:

ModPLUS Color Select Ceiling Light Fixture

By Access Lighting

Description

Featuring a sleek circular frame and white acrylic diffuser, the ModPLUS Color Select Ceiling Light Fixture has a clean look that works well in a variety of spaces. The slim design is perfect for lower ceilings. Suitable for commercial or residential use.Note: A switch allows you to change the color temperature of the light between 3000K/4000K/5000K.Note: Trim accessory is sold separately to change up the look of your space.

Shown in black / acrylic

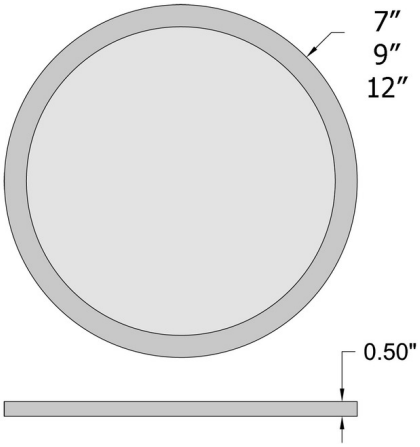

Specifications

COLOR	Acrylic
BODY FINISH	Black
WATTAGE	12W
DIMMER	Low Voltage Electronic
DIMENSIONS	7"W x 0.5"H
INTEGRATED LED MODULE	1 x LED/12W/120V LED
COUNTRY OF ORIGIN	China

Technical Information

COLOR RENDERING	90 CRI
LAMP COLOR	CCT Select
LUMENS/WATT	75.00
LUMINOUS FLUX	900 lumens

CLICK TO VIEW PRODUCT

Notes: