Lightology

lightology.com
866-954-4489
06-04-26

Project:

Company:

Location: Fixture Type:

SPEC #: **VCG1242056**

Approved On: Approved By:

Mollino Chandelier

By Visual Comfort Signature

Description

The Mollino Chandelier recalls 1930s French sculpture with its tiered shallow bowls in a plaster finish. Chunky chains add further substance and dimension to the design, and the overall aesthetic works well with many interior decor styles. The indirect uplight provides a warm glow for illuminating dining rooms, kitchens, or bedrooms. The 25 inch diameter fixture is damp-rated, and the 32 inch is dry-rated. Note: The 32 and 40 inch diameter fixtures require additional ceiling support due to its weight.

Shown in hand-rubbed antique brass / plaster white

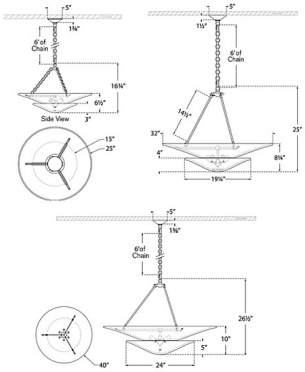

Specifications

COLOR	Plaster White
BODY FINISH	Hand-Rubbed Antique Brass
WATTAGE	19.5W
DIMMER	Standard 120V
DIMENSIONS	25"W x 16.75"H
BULB NOT INCLUDED	3 x B11/Candelabra (E12)/6.5W/120V LED

Technical Information

PRODUCT DIMENSIONS	Adjustable Chain Length: 72"

CLICK TO VIEW PRODUCT

Notes: