Lightology

lightology.com
866-954-4489
05-25-26

Project:

Company:

Location: Fixture Type:

SPEC #: **VCG1243105**

Approved On: Approved By:

Grenol Wall Sconce

By Visual Comfort Signature

DAMP

Description

The Grenol Wall Sconce brings an organic charm to your interior space. The smooth bamboo inspired frame is complemented with a tall, tapered shade that casts warm light across your room.Note: Fixture does not cover a standard US junction box and requires a 2 x 4 inch junction box.

Shown in polished nickel / linen

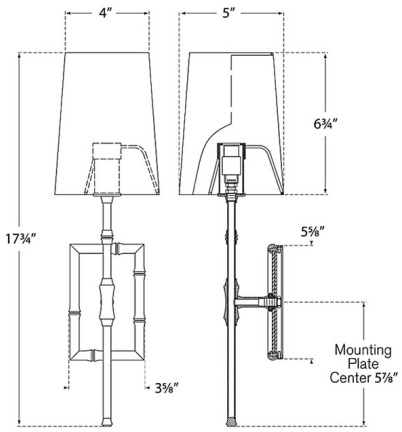

Specifications

COLOR	Linen
BODY FINISH	Polished Nickel
WATTAGE	40W
DIMMER	Standard 120V
DIMENSIONS	5"W x 17.75"H x 5"D
BULB NOT INCLUDED	1 x B11/Candelabra (E12)/40W/120V Incandescent
OTHER BULB OPTIONS	1 x B10/Candelabra (E12)/120V Incandescent
	1 x B10/Candelabra (E12)/120V LED
	1 x B11/Candelabra (E12)/120V LED

CLICK TO VIEW PRODUCT

Notes: