Lightology

lightology.com
866-954-4489
05-25-26

Project:

Company:

Location: Fixture Type:

SPEC #: **VCG1243122**

Approved On: Approved By:

Grenol Table Lamp

By Visual Comfort Signature

Description

Grenol Table Lamp brings an organic charm to your interior space. The smooth bamboo inspired body holds a glass panel in the base and is topped with a tapered shade that casts warm light across your room. Dimmer switch is located on the lamp socket.

Shown in bronze / linen

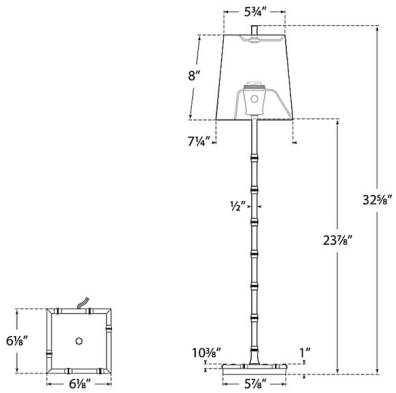

Specifications

COLOR	Linen
BODY FINISH	Bronze
WATTAGE	40W
DIMMER	Included
DIMENSIONS	7.25"W x 32.625"H
BULB NOT INCLUDED	1 x B11/Candelabra (E12)/40W/120V Incandescent
OTHER BULB OPTIONS	1 x B10/Candelabra (E12)/120V Incandescent
	1 x B10/Candelabra (E12)/120V LED
	1 x B11/Candelabra (E12)/120V LED

CLICK TO VIEW PRODUCT

Notes: