Lightology

lightology.com
866-954-4489
06-04-26

Project:

Company:

Location: Fixture Type:

SPEC #: **HMR1304655**

Approved On: Approved By:

Cabochon Double Wall Sconce

By Hammerton Studio

Description

The Cabochon Double Wall Sconce brings a sculptural fusion of style and light to your interior space. The smooth frame is complemented by dual gemstone inspired, artisan blown glass diffusers that are capped, casting warm shadows of light across your room.

Shown in flat bronze / clear

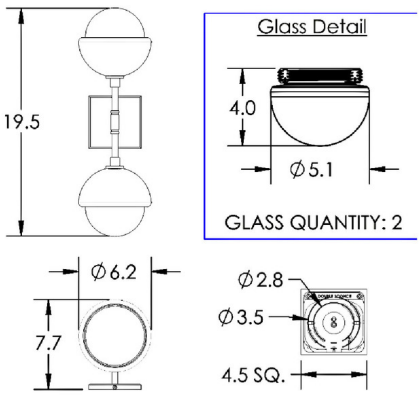

Specifications

COLOR	Clear
BODY FINISH	Flat Bronze
WATTAGE	12W
DIMMER	Low Voltage Electronic
DIMENSIONS	6.2"W x 19.5"H x 7.7"D
INTEGRATED LED MODULE	2 x LED/6W/120V LED

Technical Information

LAMP COLOR	2700K
LUMENS/WATT	77.67
LUMINOUS FLUX	466 lumens

CLICK TO VIEW PRODUCT

Notes: