Lightology

lightology.com
866-954-4489
06-04-26

Project:

Company:

Location: Fixture Type:

SPEC #: **MAX1375680**

Approved On: Approved By:

# Pinn Pendant

By Maxim Lighting

## Description

The Pinn Pendant adds a bold industrial look to your interior space. The smooth frame holds cylindrical glass, with decorative thumbscrews, that cast warm shadows of light across your area. Note: Use with a variety of medium base bulbs, up to 60 watts, to create your own look.

Shown in black / satin brass / clear

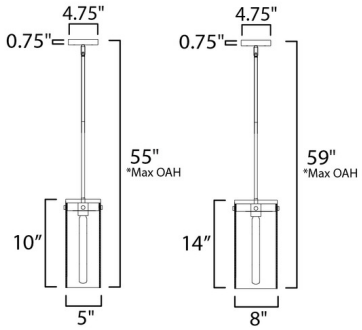


**Specifications**

| | |
|---|---|
| COLOR | Clear |
| BODY FINISH | Black / Satin Brass |
| WATTAGE | 9W |
| DIMMER | Standard 120V |
| DIMENSIONS | 5"W x 10"H |
| BULB NOT INCLUDED | 1 x T10/Medium (E26)/9W/120V LED |
| OTHER BULB OPTIONS | A19/Medium (E26)/60W/120V Incandescent |
| | A19/Medium (E26)/9W/120V LED |
| | Edison ST-Shape/Medium (E26)/60W/120V Incandescent |
| | Edison ST-Shape/Medium (E26)/9W/120V LED |
| | T10/Medium (E26)/60W/120V Incandescent |

**Technical Information**

| | |
|---|---|
| PRODUCT DIMENSIONS | Downrods: One 6" and Three 12" Included |

CLICK TO VIEW PRODUCT

Notes: