Lightology

lightology.com
866-954-4489
05-17-26

Project:

Company:

Location: Fixture Type:

SPEC #: **AHM1420046**

Approved On: Approved By:

Ichigo Console

By Arteriors Home

Description

The Ichigo Console has a slim in profile, crafted of ebony mango wood. This traditional parsons style piece is updated with hand-carved claw feet and will blend perfectly into a variety of styles.

Shown in ebony

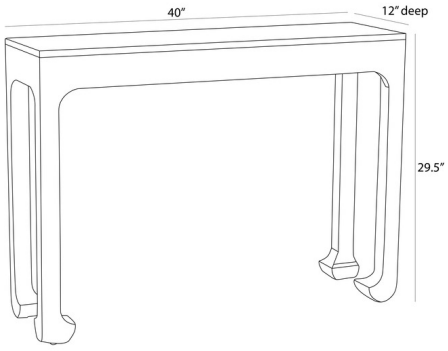

Specifications

COLOR	N/A
BODY FINISH	Ebony
WATTAGE	N/A
DIMMER	N/A
DIMENSIONS	40"W x 29.5"H x 12"D
BULB	N/A

CLICK TO VIEW PRODUCT

Notes: