Lightology

lightology.com
866-954-4489
06-01-26

Project:

Company:

Location: Fixture Type:

SPEC #: **BOV593760**

Approved On: Approved By:

Drip/Drop Floor Lamp with Tray - Overstock

By Bover

Description

The Drip/Drop Floor Lamp features a slim frame ornamented at the top by a petite lamp shade made of fine borosilicate glass. While minimal in form, the Drip/Drop is packed with function including a USB charging port on the base, a round tray table lined with taupe coated fabric, and an LED light that provides warm illumination. This piece fits perfectly into living rooms, offices and lounges. Weight capacity of the tray is 4.41 lb. On/off switch on cord. NOTE: This is a discontinued model and limited to quantity on hand.

Shown in ebony black / blue glass

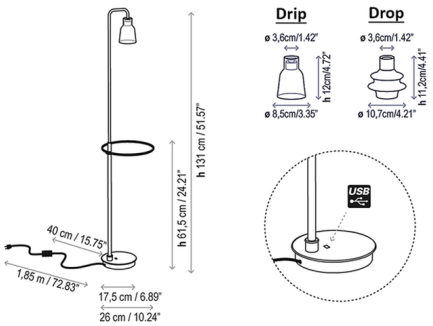

Specifications

COLOR	Blue Glass
BODY FINISH	Ebony Black
WATTAGE	3W
DIMMER	N/A
DIMENSIONS	10.24"W x 51.57"H
INTEGRATED LED MODULE	1 x LED/3W/120V LED
COUNTRY OF ORIGIN	Spain

Technical Information

COLOR RENDERING	90 CRI
LAMP COLOR	2700K
LUMENS/WATT	115.00
LUMINOUS FLUX	345 lumens

CLICK TO VIEW PRODUCT

Notes: