Lightology

lightology.com
866-954-4489
04-29-26

Project:

Company:

Location: Fixture Type:

SPEC #: **EDG625455**

Approved On: Approved By:

Verge Corner Static White Drywall Plaster-In System 24V

By PureEdge Lighting

Description

Verge Corner features an innovative design that mounts directly to wall studs or ceiling joists without any modification, and is recessed and plastered into 5/8 inch or thicker drywall. The Verge system creates visually interesting and dramatic illumination by highlighting the inside corners of two drywall surfaces. Sold in 5 foot increments (available in 1 foot increments) up to 40 feet (5 Watt), up to 20 feet (10 Watt), and 12 feet (14 Watt), and is field-cuttable. Included components: Junction Box, Adjustable Mounting Bars, Backer Plate, Verge Channel, Drywall Screws, LED Strip, and Lens(es). Features a 4 inch paintable backer plate. NOTE: Required power supply, dimmer control, and optional accessories sold separately.

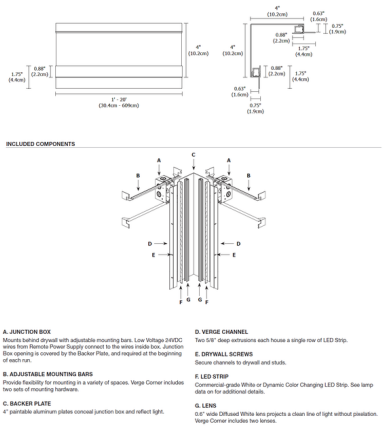

Specifications

COLOR	N/A
BODY FINISH	Aluminum
WATTAGE	25W
DIMMER	Low Voltage Electronic
DIMENSIONS	60"L x 0.75"W x 4"H
INTEGRATED LED MODULE	5 x LED/5W/24V LED

Technical Information

LAMP LIFE	50000 hours
COLOR RENDERING	95 CRI
LAMP COLOR	2700K
LUMENS/WATT	372.00
LUMINOUS FLUX	1860 lumens

Notes: