Lightology

lightology.com
866-954-4489
06-04-26

Project:

Company:

Location: Fixture Type:

SPEC #: **BVE658647**

Approved On: Approved By:

Ersa Ceiling Light

By Brand Van Egmond

Description

THe Ersa Ceiling Flush Light, named for the Greek Goddess of dew, draws inspiration from natures dew drops formed throughout the night and glistening in the first rays of light. This sculptural masterpiece brings organic shaped glass and sinewy branches of metal to your space. Available in two sizes. Each fixture is a unique, hand crafted piece, and comes with a certificate of authenticity.

Shown in nickel / iridescent

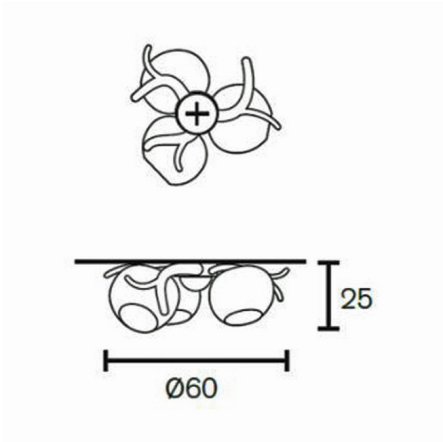

Specifications

COLOR	Iridescent
BODY FINISH	Nickel
WATTAGE	15W
DIMMER	Standard 120V
DIMENSIONS	23.6"W x 9.8"H
BULB NOT INCLUDED	3 x G25/Medium (E26)/5W/120V LED
OTHER BULB OPTIONS	3 x G25/Medium (E26)/120V LED 3 x G25/Medium (E26)/60W/120V Incandescent
COUNTRY OF ORIGIN	Netherlands

CLICK TO VIEW PRODUCT

Notes: