Lightology

G16.5 Med Base 5W 120V 2700K 92CRI

SPEC # 90P672256

BRAND 90+ Lighting

DESCRIPTION

The 5 Watt G16.5 Medium Base LED Bulb is compatible with standard fixtures using an E26 base. Available in Clear or Frost. Equivalent to a 40 watt incandescent. High quality of light and low flicker, listed with California Energy Commission's (CEC) JAB/Title 24 standard for quality of light. Listed for energy efficiency by the CEC for Title 20, insuring high efficacy with a high quality of light. Dimmable to 1 percent when used with specific dimmers (see attached manufacturer reference for dimmer compatibility). Not for use in totally enclosed fixtures.

SHADE COLOR	Frosted
BODY FINISH	N/A
WATTAGE	5W
DIMMER	Dimmable
DIMENSIONS	1.93"W x 2.95"H
BULB INCLUDED	
LAMP	1 x G16.5/Medium (E26)/5W/120V LED
Technical Information	
LUMINOUS FLUX	350 lumens
LUMENS/WATT	70.00
LAMP COLOR	2700K
COLOR RENDERING	92 CRI
BEAM ANGLE	180°
SPEC #	90P672256

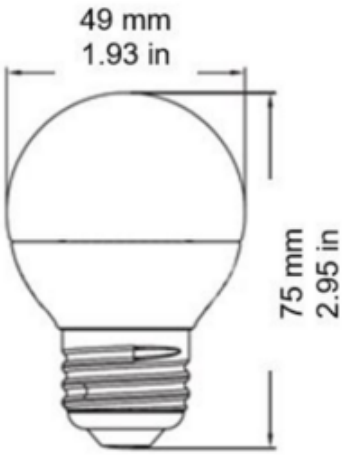

COMPANY	PROJECT	FIXTURE TYPE	APPROVED BY	DATE