Lightology

lightology.com
866-954-4489
05-21-26

Project:

Company:

Location: Fixture Type:

SPEC #: **SCO898219**

Approved On: Approved By:

Arne Domus Outdoor Pendant

By Santa & Cole

Description

The Arne Domus Outdoor Pendant is an elegant yet industrial piece, suitable for a variety of spaces, both indoor and out.

Shown in aluminum grey

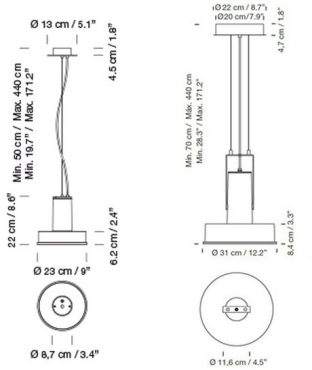

Specifications

COLOR	Aluminum Grey
BODY FINISH	N/A
WATTAGE	28W
DIMMER	0-10V
DIMENSIONS	9"W x 8.6"H
INTEGRATED LED MODULE	1 x LED/28W/120V LED

Technical Information

PRODUCT DIMENSIONS	Cable Length: 157.5"
LAMP LIFE	50000 hours
COLOR RENDERING	90 CRI
LAMP COLOR	2700K
LUMENS/WATT	88.21
LUMINOUS FLUX	2470 lumens

CLICK TO VIEW PRODUCT

Notes: