Lightology

lightology.com
866-954-4489
10-25-26

Project:

Company:

Location: Fixture Type:

SPEC #: **DCW903977**

Approved On: Approved By:

Lampe Gras N222 Conic Shade Plug-in Wall Sconce

By DCWEditions

Description

The Lampe Gras N222 Conic Shade Plug-in Wall Sconce brings to your space, a clean architectural look with hints of industrialism. The shade adjusts to direct light and the arm adjusts for perfect lighting. Available with a Matte Black finish and cone shape shade in Black with Copper lining, Red, Black, Blue, Brass, Chrome, Copper, Raw Copper, Raw Copper with White lining, Copper with White lining, White, White with Copper lining, or Yellow. On/Off switch is located on the cord. CE listed.

Shown in matte black / black / copper interior

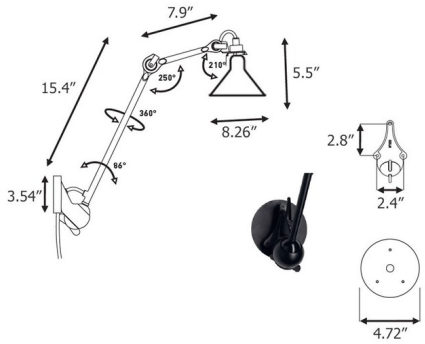

Specifications

COLOR	Black / Copper Interior
BODY FINISH	Matte Black
WATTAGE	11W
DIMMER	Included
DIMENSIONS	8.26"W x 18.9"H x 23.2"D
BULB NOT INCLUDED	1 x B10/Candelabra (E12)/11W/120V LED

Technical Information

PRODUCT DIMENSIONS	Cord: 90.6"

CLICK TO VIEW PRODUCT

Notes: