Lightology

lightology.com
866-954-4489
06-04-26

Project:

Company:

Location: Fixture Type:

SPEC #: **HMR947929**

Approved On: Approved By:

Meteo Gem Pendant

By Hammerton Studio

Description

The Meteo Gem Pendant is a clean simple piece, perfect in a variety of interior spaces. The artisan blown and cast glass, undulated gently in an organic form, has a inner floret, geo, or zircon gem creating an interesting conversation piece. Each Piece is a unique work of art.Choose from a Smoke, Clear, Bronze, or Amber shade with a Floret, Geo, or Zircon inner element with a Matte Black, Metallic Beige Silver, Flat Bronze, or Gilded Brass finish. Made in the USA. UL listed.

Shown in matte black / smoke floret

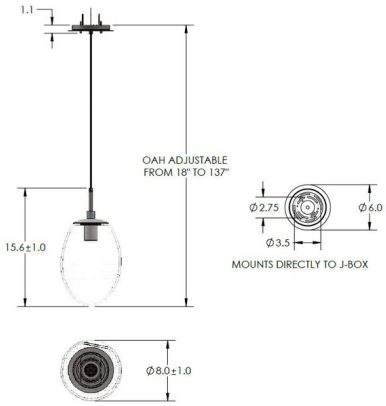

Specifications

COLOR	Smoke Floret
BODY FINISH	Matte Black
WATTAGE	5.2W
DIMMER	Low Voltage Electronic
DIMENSIONS	9"W x 12"H
INTEGRATED LED MODULE	1 x LED/5.2W/120V LED
COUNTRY OF ORIGIN	United States

Technical Information

PRODUCT DIMENSIONS	Max Overall Height: 137"
COLOR RENDERING	93 CRI
LAMP COLOR	2700K
LUMENS/WATT	65.38
LUMINOUS FLUX	340 lumens

CLICK TO VIEW PRODUCT

Notes: